Published: 11-May-2011

Automatic Transmission / Transaxle - V8 5.0L Petrol / TDV6 3.0L Diesel -

Maintenance

CAUTION: Use only Shell M1375.4 Automatic transmission fluid. Use of any other fluids may result in a transmission malfunction or failure.

Description	Intervals
Normal maintenance	Filled for life.
Severe duty maintenance	Change the fluid at 48,000 km (30,000 miles) intervals.

Capacities

	Liters
Transmission	9.9

Lubricants, Fluids, Sealers and Adhesives

Description	Specification
Transmission fluid	Shell M1375.4
Sealant	WSS-M4G323-A6
Metal surface cleaner	WSW-M5B392-A
High temperature grease	Molecote FB180

Torque Specifications

- NOTE: A = refer to the procedure for correct torque sequence

Description	Nm	lb-ft	lb-in
Transmission retaining bolts	48	35	-
Transmission mount retaining bolts	60	44	-
Transmission fluid fill plug	A	A	A
Transmission control module (TCM) and main control valve body retaining bolts	8	-	53
Torque converter retaining bolts	62	46	-
Transmission fluid cooler tube retaining bolt	22	16	-
Transmission fluid drain plug	8	-	53
Transmission fluid pan, gasket and filter retaining bolts	8	-	53

transmissionmanuals.com

Published: 11-May-2011

Automatic Transmission / Transaxle - V8 5.0L Petrol / TDV6 3.0L Diesel - Transmission Description

Description and Operation

COMPONENT LOCATION

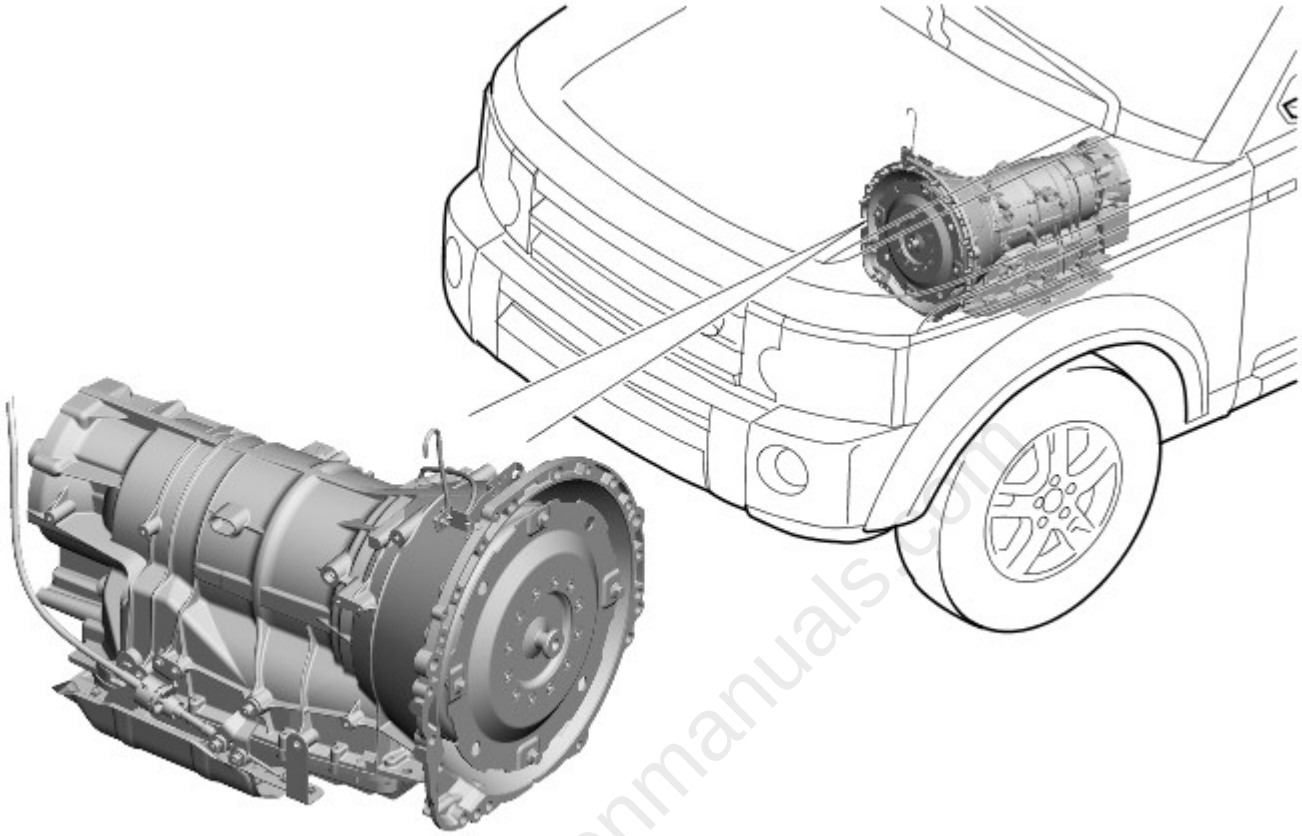

E122443

INTRODUCTION

The ZF 6HP28 transmission is an electronically controlled, hydraulically operated, six speed automatic unit. The hydraulic and electronic control elements of the transmission, including the TCM (transmission control module), are incorporated in a single unit located inside the transmission and is known as 'Mechatronic'.

3.0L diesel models use an uprated derivative of the ZF 6HP28 transmission used in the 5.0L naturally aspirated models.

The ZF 6HP28 transmission has the following features:

- Designed to be maintenance free
- Transmission fluid is 'fill for life'
- The torque converter features a controlled slip feature with electronically regulated control of lock-up, creating a smooth transition to the fully locked condition
- Shift programs controlled by the TCM
- ASIS (adaptive shift strategy), to provide continuous adaptation of shift changes to suit the driving style of the driver, which can vary from sporting to economical
- Connected to the ECM (engine control module) via the high speed CAN (controller area network) bus for communications
- Default mode if major faults occur
- Diagnostics available from the TCM via the high speed CAN bus.

The transmission selections are made using the selector lever in the floor console and two paddle switches on the steering wheel.
For additional information, refer to: External Controls (307-05C Automatic Transmission/Transaxle External Controls - V8 5.0L Petrol/TDV6 3.0L Diesel, Description and Operation).

TRANSMISSION

The transmission comprises the main casing which houses all of the transmission components. The main casing also incorporates an integral bell housing.

A fluid pan is attached to the lower face of the main casing and is secured with bolts. The fluid pan is sealed to the main casing with a gasket. Removal of the fluid pan allows access to the Mechatronic valve block. The fluid pan has a magnet located around the drain plug which collects any metallic particles present in the transmission fluid.

A fluid filter is located inside the fluid pan. If the transmission fluid becomes contaminated or after any service work, the fluid pan with integral filter must be replaced.

transmissionmanuals.com

On the RH (right-hand) side of the transmission, a gear change lever is installed on the end of a selector shaft. The selector shaft operates a selector spool valve and a selector switch in the transmission. A selector cable, connected between the gear change lever and the selector lever in the floor console, controls the position of the selector shaft.

The integral bell housing provides protection for the torque converter assembly and also provides the attachment for the gearbox to the engine. The torque converter is a non-serviceable assembly which also contains the lock-up clutch mechanism. The torque converter drives a crescent type pump via drive tangs. The fluid pump is located in the main casing, behind the torque converter.

The main casing contains the following major components:

- Input shaft
- Output shaft
- Mechatronic valve block which contains the solenoids, speed sensors and the TCM
- Three rotating multiplate drive clutches
- Two fixed multiplate brake clutches
- A single planetary gear train and a double planetary gear train.

transmissionmanuals.com

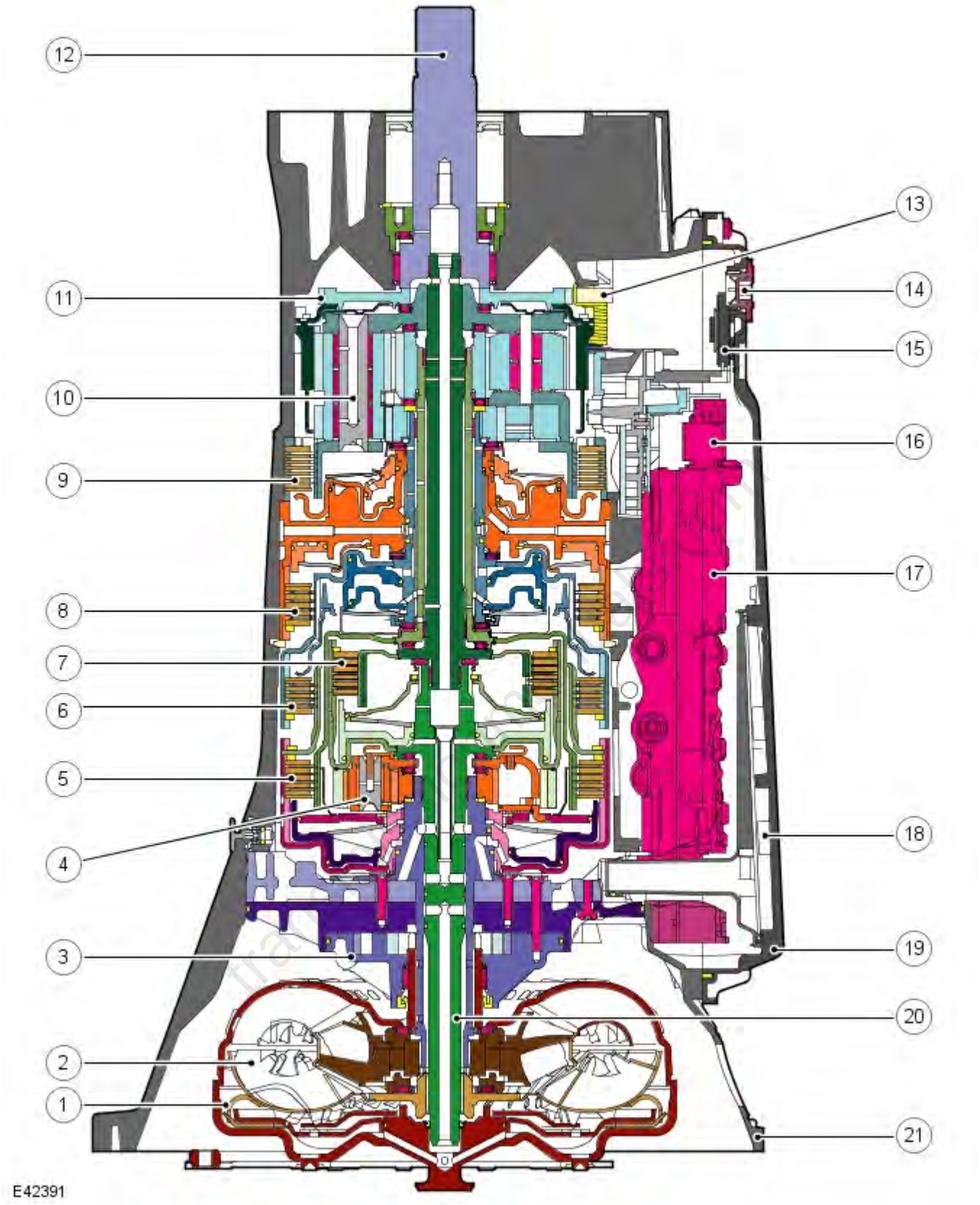

Item	Part Number	Description
1	-	Torque converter lock-up clutch
2	-	Torque converter
3	-	Fluid pump
4	-	Single planetary gearset
5	-	Clutch A
6	-	Clutch B
7	-	Clutch E
8	-	Brake C
9	-	Brake D
10	-	Double planetary gearset
11	-	Park lock gear

12	-	Output shaft
13	-	Park lock pawl
14	-	Drain plug
15	-	Magnet
16	-	Pressure regulator
17	-	Mechatronic valve block
18	-	Fluid filter
19	-	Fluid pan
20	-	Input shaft
21	-	Transmission casing

TORQUE CONVERTER

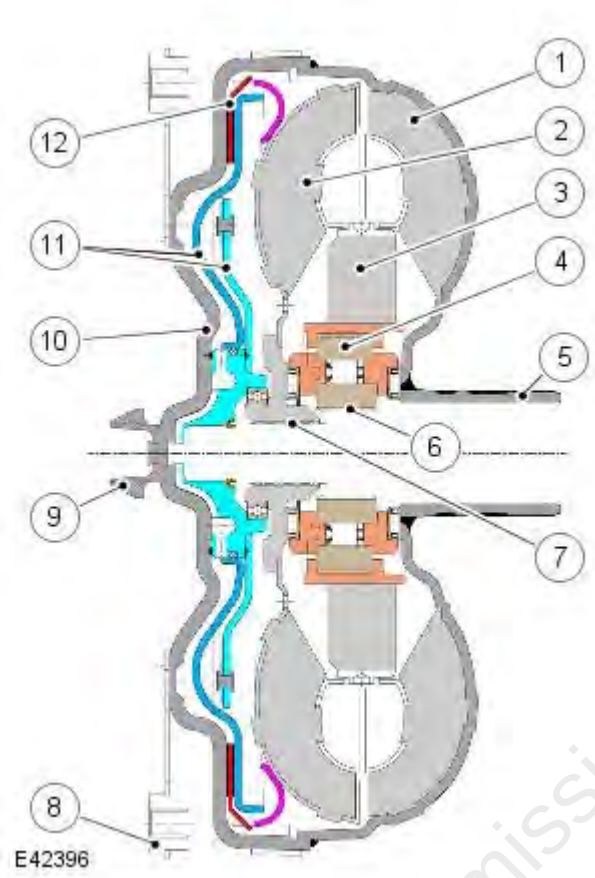

Item	Part Number	Description
1	-	Impeller
2	-	Turbine
3	-	Stator
4	-	Freewheel clutch
5	-	Torque converter hub
6	-	Stator shaft
7	-	Turbine shaft
8	-	Drive plate
9	-	Journal - Drive plate/crankshaft location
10	-	Torque converter cover
11	-	Lock-up clutch piston
12	-	Lock-up clutch plate

The torque converter is the coupling element between the engine and the transmission and is located in the bell housing, on the engine side of the transmission. The driven power from the engine crankshaft is transmitted hydraulically and mechanically through the torque converter to the transmission. The torque converter is connected to the engine by a drive plate attached to the rear of the crankshaft.

The torque converter comprises an impeller, a stator and a turbine. The torque converter is a sealed unit with all components located between the converter housing cover and the impeller. The two components are welded together to form a sealed, fluid filled housing. With the impeller welded to the converter housing cover, the impeller is therefore driven at engine crankshaft speed.

The converter housing cover has four threaded bosses, which provide for attachment of the engine drive plate. The threaded bosses also provide for location of special tools which are required to remove the torque converter from the bell housing.

Impeller

Fluid Flow

transmissionmanuals.com

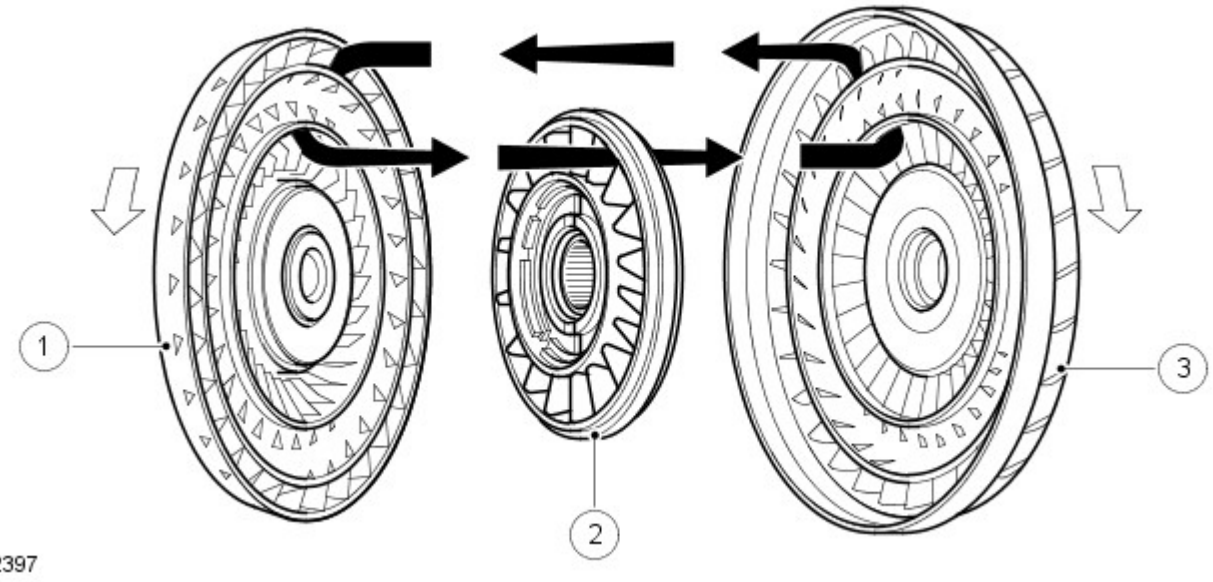

Item	Part Number	Description
1	-	Turbine
2	-	Stator
3	-	Impeller

When the engine is running the rotating impeller acts as a centrifugal pump, picking up fluid at its center and discharging it at high velocity through the blades on its outer rim. The design and shape of the blades and the curve of the impeller body cause the fluid to rotate in a clockwise direction as it leaves the impeller. This rotation improves the efficiency of the fluid as it contacts the outer row of blades on the turbine.

The centrifugal force of the fluid leaving the blades of the impeller is passed to the curved inner surface of the turbine via the tip of the blades. The velocity and clockwise rotation of the fluid causes the turbine to rotate.

Turbine

The turbine is similar in design to the impeller with a continuous row of blades. Fluid from the impeller enters the turbine through the tip of the blades and is directed around the curved body of the turbine to the root of the blades. The curved surface redirects the fluid back in the opposite direction to which it entered the turbine, effectively increasing the turning force applied to the turbine from the impeller. This principle is known as torque multiplication.

When engine speed increases, turbine speed also increases. The fluid leaving the inner row of the turbine blades is rotated in a counter-clockwise direction due to the curve of the turbine and the shape of the blades. The fluid is now flowing in the opposite direction to the engine rotation and therefore the impeller. If the fluid was allowed to hit the impeller in this condition, it would have the effect of applying a brake to the impeller, eliminating the torque multiplication effect. To prevent this, the stator is located between the impeller and the turbine.

Stator

The stator is located on the splined transmission input shaft via a freewheel clutch. The stator comprises a number of blades which are aligned in an opposite direction to those of the impeller and turbine. The main function of the stator is to redirect the returning fluid from the turbine, changing its direction to that of the impeller.

The redirected fluid from the stator is directed at the inner row of blades of the impeller, assisting the engine in turning the impeller. This sequence increases the force of the fluid emitted from the impeller and thereby increases the torque multiplication effect of the torque converter.

Stator Functions

- NOTE: The following illustration shows a typical stator

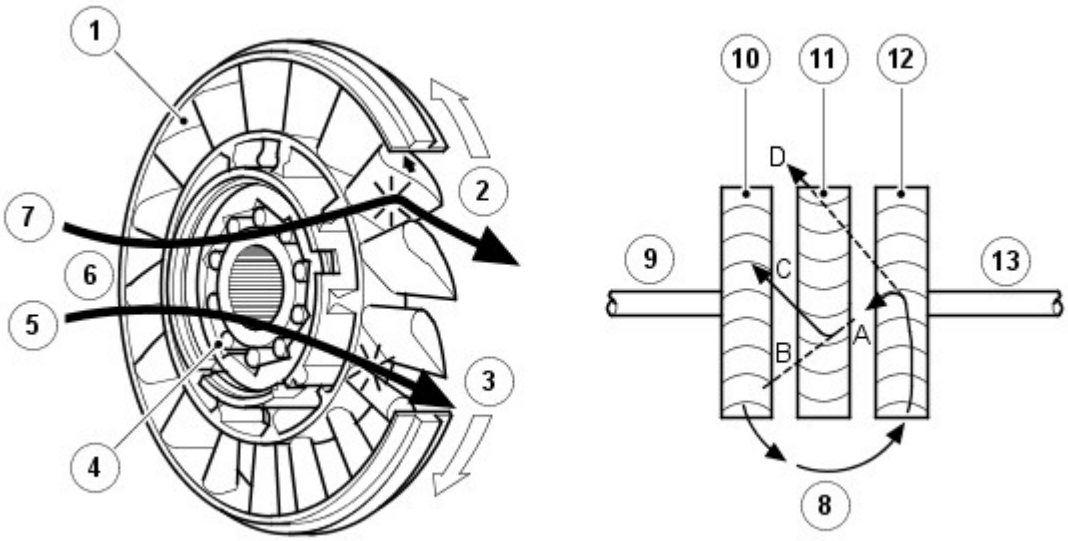

E 42398

Item	Part Number	Description
1	-	Blades
2	-	Stator held – fluid flow redirected
3	-	Stator rotates freely
4	-	Roller
5	-	Converter at coupling speed
6	-	Fluid flow from turbine
7	-	Converter multiplying
8	-	Fluid flow from impeller
9	-	Drive from engine
10	-	Impeller
11	-	Stator
12	-	Turbine
13	-	Output to transmission

Fluid emitted from the impeller acts on the turbine. If the turbine is rotating at a slower speed than the fluid from the impeller, the fluid will be deflected by the turbine blades in the path **'A'**. The fluid is directed at and deflected by the stator blades from path **'B'** to path **'C'**. This ensures that the fluid is directed back to the pump in the optimum direction. In this condition the sprag clutch is engaged and the force of the fluid on the stator blades assists the engine in rotating the impeller.

As the rotational speed of the engine and therefore the turbine increases, the direction of the fluid leaving the turbine changes to path **'D'**. The fluid is now directed from the turbine to the opposite side of the stator blades, rotating the stator in the opposite direction. To prevent the stator from resisting the smooth flow of the fluid from the turbine, the sprag clutch releases, allowing the stator to rotate freely on its shaft.

When the stator becomes inactive, the torque converter no longer multiplies the engine torque. When the torque converter reaches this operational condition it ceases to multiply the engine torque and acts solely as a fluid coupling, with the impeller and the turbine rotating at approximately the same speed.

The stator uses a sprag type, one way, freewheel clutch. When the stator is rotated in a clockwise direction the sprags twist and are wedged between the inner and outer races. In this condition the sprags transfer the rotation of the outer race to the inner race which rotates at the same speed.

One Way Free Wheel Clutch – Typical

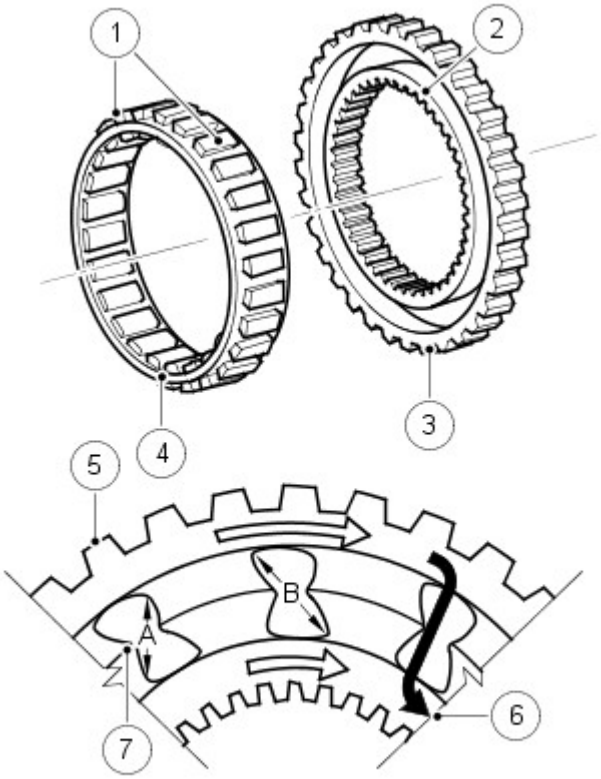

E42712

Item	Part Number	Description
1	-	Sprags
2	-	Inner race
3	-	Outer race
4	-	Sprag and cage assembly
5	-	Sprag outer race
6	-	Sprag inner race
7	-	Retaining ring

The free wheel clutch can perform three functions; hold the stator stationary, drive the stator and free wheel allowing the stator to rotate without a drive output. The free wheel clutch used in the ZF 6HP28 transmission is of the sprag type and comprises an inner and outer race and a sprag and cage assembly. The inner and outer races are pressed into their related components with which they rotate. The sprag and cage assembly is located between the inner and outer races.

The sprags are located in a cage which is a spring which holds the sprags in the 'wedge' direction and maintains them in contact with the inner and outer races.

Referring to the illustration, the sprags are designed so that the dimension **'B'** is larger than the distance between the inner and outer race bearing surfaces. When the outer race rotates in a clockwise direction, the sprags twist and the edges across the dimension **'B'** wedge between the races, providing a positive drive through each sprag to the inner race. The dimension **'A'** is smaller than the distance between the inner and outer race bearing surfaces. When the outer race rotates in an anti-clockwise direction, the dimension **'A'** is too small to allow the sprags to wedge between the races, allowing the outer race to rotate freely.

On the illustration shown, when the outer race is rotated in a clockwise direction, the sprags twist and are 'wedged' between the inner and outer races. The sprags then transfer the rotation of the outer race to the inner race, which rotates at the same speed.

Lock-Up Clutch Mechanism

The TCC (torque converter clutch) is hydraulically controlled by an EPRS (electronic pressure regulating solenoid), which is controlled by the TCM. This allows the torque converter to have three states of operation as follows:

- Fully engaged
- Controlled slip variable engagement
- Fully disengaged.

The TCC is controlled by two hydraulic spool valves located in the valve block. These valves are actuated by pilot pressure supplied via a solenoid valve which is also located in the valve block. The solenoid valve is operated by PWM (pulse width modulation) signals from the TCM to give full, partial or no lock-up of the torque converter.

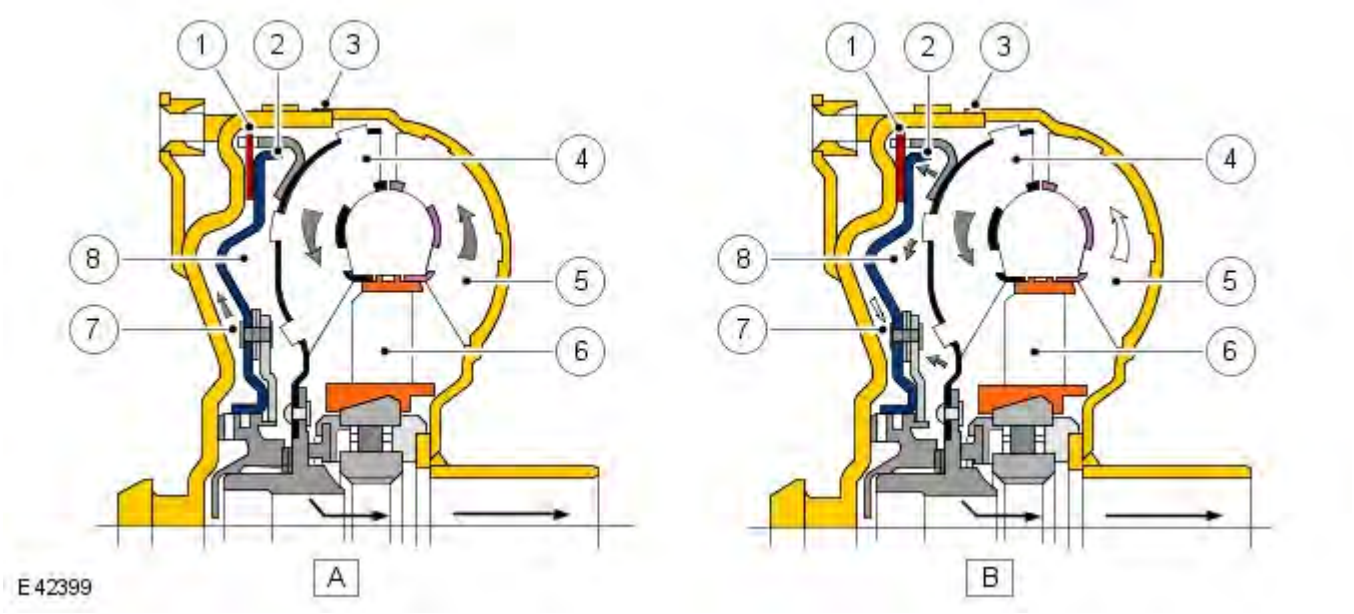

Item	Part Number	Description
A	-	Unlocked condition
B	-	Locked condition
1	-	Clutch plate
2	-	Clutch piston
3	-	Torque converter body
4	-	Turbine
5	-	Impeller
6	-	Stator
7	-	Piston chamber
8	-	Turbine chamber

The lock-up clutch is a hydro-mechanical device which eliminates torque converter slip, improving fuel consumption. The engagement and disengagement is controlled by the TCM to allow a certain amount of controlled 'slip'. This allows a small difference in the rotational speeds of the impeller and the turbine which results in improved shift quality. The lock-up clutch comprises a piston and a clutch friction plate.

In the unlocked condition, the oil pressure supplied to the piston chamber and the turbine chamber is equal. Pressurized fluid flows through a drilling in the turbine shaft and through the piston chamber to the turbine chamber. In this condition the clutch plate is held away from the torque converter body and torque converter slip is permitted.

In the locked condition, the TCC spool valves are actuated by the EPRS. The fluid flow in the unlocked condition is reversed and the piston chamber is vented. Pressurized fluid is directed into the turbine chamber and is applied to the clutch piston. The piston moves with the pressure and pushes the clutch plate against the torque converter body. As the pressure increases, the friction between the clutch plate and the body increases, finally resulting in full lock-up of the clutch plate with the body. In this condition there is direct mechanical drive from the engine crankshaft to the transmission planetary gear train.

FLUID PUMP

The fluid pump is an integral part of the transmission. The fluid pump is used to supply hydraulic pressure for the operation of the control valves and clutches, to pass the fluid through the transmission cooler and to lubricate the gears and shafts.

The ZF 6HP28 fluid pump is a crescent type pump and is located between the intermediate plate and the torque converter. The pump has a delivery rate of 16 cm^3 per revolution.

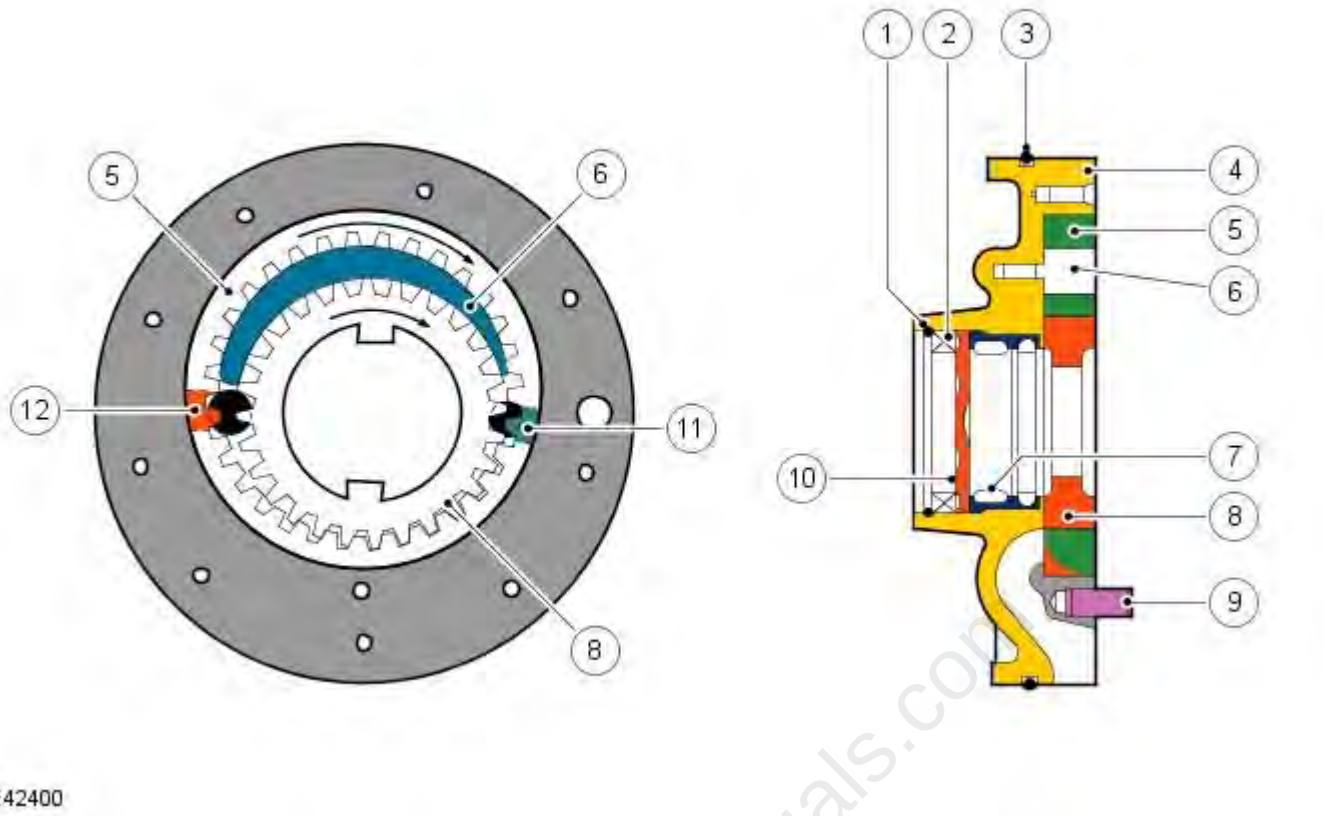

E42400

Item	Part Number	Description
1	-	Securing ring
2	-	Shaft oil seal
3	-	O-ring seal
4	-	Pump housing
5	-	Ring gear
6	-	Crescent spacer
7	-	Roller bearing
8	-	Impeller
9	-	Centering pin
10	-	Spring washer
11	-	Outlet port (high pressure)
12	-	Inlet port (low pressure)

The pump comprises a housing, a crescent spacer, an impeller and a ring gear. The housing has inlet and outlet ports to direct flow and is located in the intermediate plate by a centering pin. The pump action is achieved by the impeller, ring gear and crescent spacer.

The crescent spacer is fixed in its position by a pin and is located between the ring gear and the impeller. The impeller is driven by drive from the torque converter hub which is located on a needle roller bearing in the pump housing. The impeller teeth mesh with those of the ring gear. When the impeller is rotated, the motion is transferred to the ring gear which rotates in the same direction.

The rotational motion of the ring gear and the impeller collects fluid from the intake port in the spaces between the teeth. When the teeth reach the crescent spacer, the oil is trapped in the spaces between the teeth and is carried with the rotation of the gears. The spacer tapers near the outlet port. This reduces the space between the gear teeth causing a build up of fluid pressure as the oil reaches the outlet port. When the teeth pass the end of the spacer the pressurized fluid is released into the outlet port.

The fluid emerging from the outlet port is passed through the fluid pressure control valve. At high operating speeds the pressure control valve maintains the output pressure to the gearbox at a predetermined maximum level. Excess fluid is relieved from the pressure control valve and is directed, via the main pressure valve in the valve block, back to the pump inlet port. This provides a pressurized feed to the pump inlet which prevents cavitation and reduces pump noise.

MECHATRONIC VALVE BLOCK

The Mechatronic valve block is located in the bottom of the transmission and is covered by the fluid pan. The valve block houses the TCM, electrical actuators, speed sensors and control valves which provide all electro-hydraulic control for all transmission functions. The Mechatronic valve block comprises the following components:

- TCM
- Six pressure regulator solenoids
- One shift control solenoid
- One damper
- Twenty one hydraulic spool valves
- Manually operated selector valve
- Temperature sensor

- Turbine speed sensor
- Output shaft speed sensor.

Mechatronic Valve Block

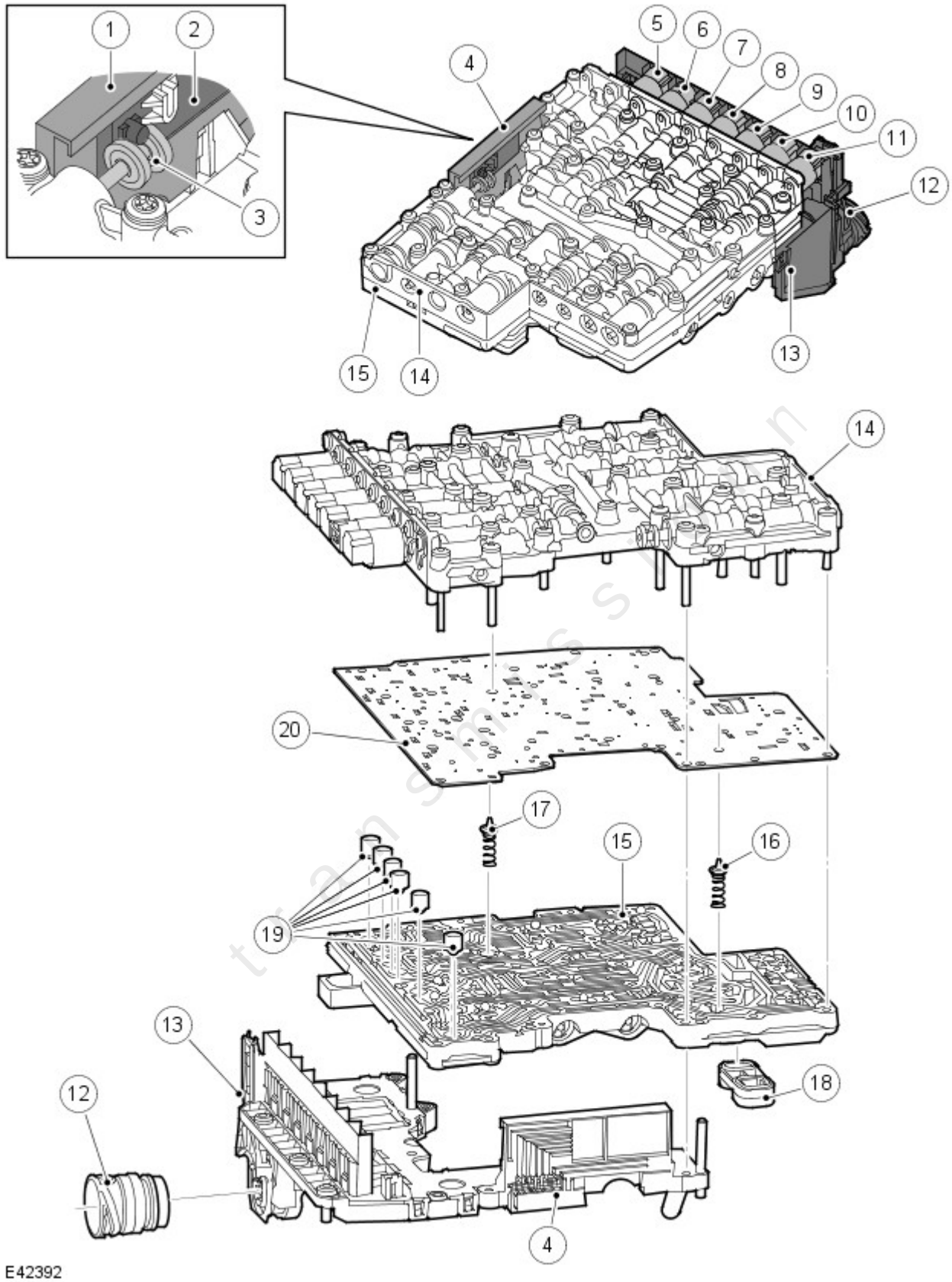

Item	Part Number	Description
1	-	Position switch
2	-	Sliding block
3	-	Selector spool valve
4	-	Position switch assembly
5	-	EPRS 6
6	-	Solenoid Valve 1
7	-	EPRS 4

8	-	EPRS 5
9	-	EPRS 3
10	-	EPRS 2
11	-	EPRS 1
12	-	Electrical connector
13	-	TCM
14	-	Valve housing
15	-	Valve plate
16	-	Torque converter retaining valve
17	-	Clutch return valve
18	-	Element seal
19	-	Pressure regulator dampers
20	-	Intermediate plate

Valve Housing Components

transmissionmanuals.com

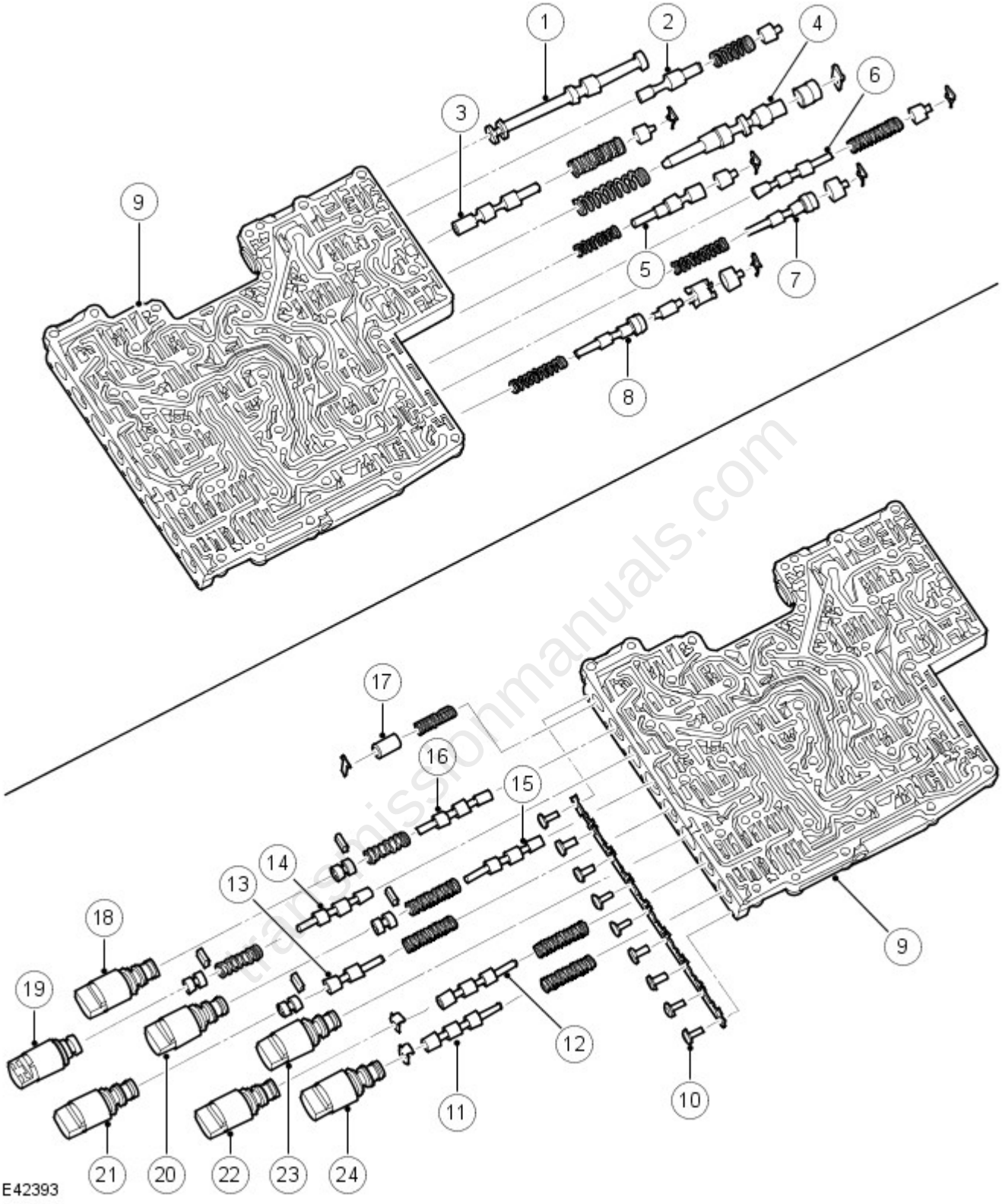

transmissionmanuals.com

Item	Part Number	Description
1	-	Selector spool valve
2	-	Lubricating valve
3	-	Torque converter pressure valve
4	-	System pressure valve
5	-	Torque converter clutch valve
6	-	Retaining valve – Clutch E
7	-	Clutch valve E
8	-	Clutch valve A
9	-	Valve housing
10	-	Bolts
11	-	Retaining valve – Clutch A

12	-	Retaining valve – Clutch B
13	-	Pressure reducing valve
14	-	Shift valve 1
15	-	Retaining valve – Brake D
16	-	Shift valve 2
17	-	Damper
18	-	EPRS 6
19	-	Solenoid valve 1
20	-	EPRS 4
21	-	EPRS 5
22	-	EPRS 2
23	-	EPRS 3
24	-	EPRS 1

Valve Plate Components

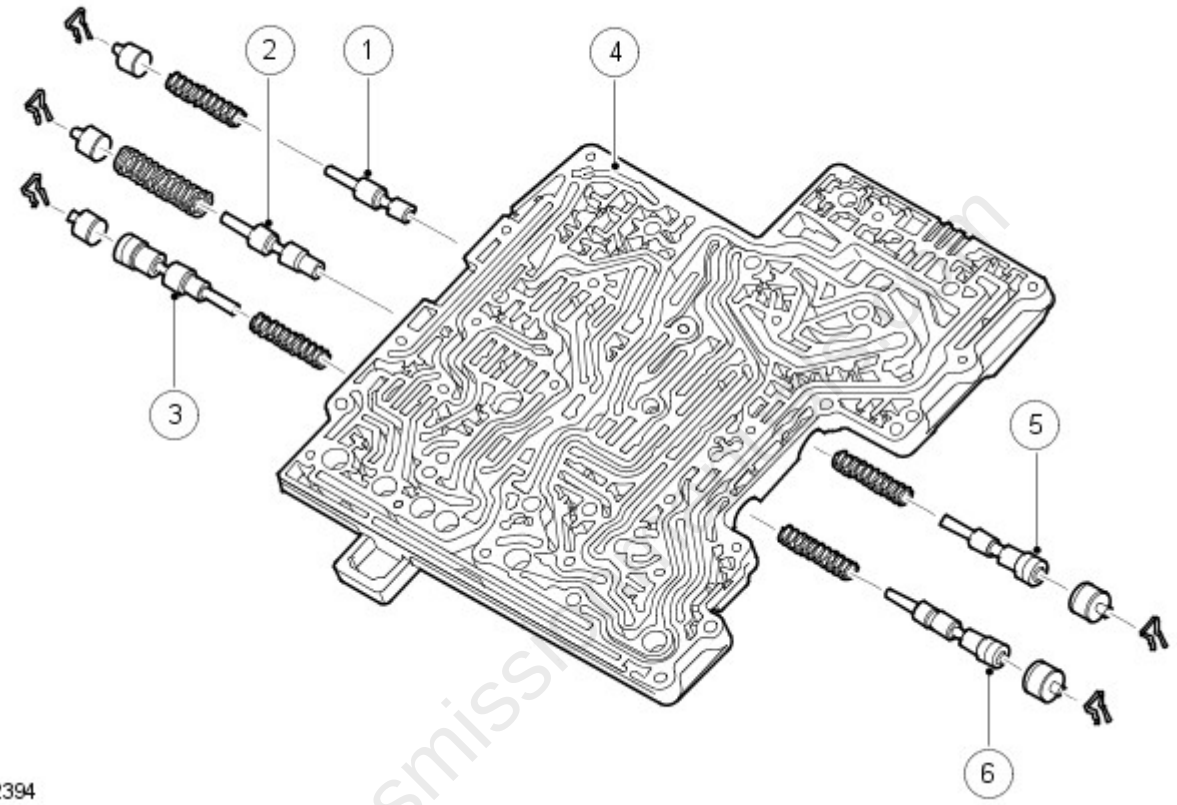

Item	Part Number	Description
1	-	Retaining valve – Brake D2
2	-	Clutch valve – Brake D2
3	-	Clutch valve B
4	-	Valve plate
5	-	Clutch valve – Brake D1
6	-	Clutch valve – Brake C

Electronic Pressure Regulator Solenoids

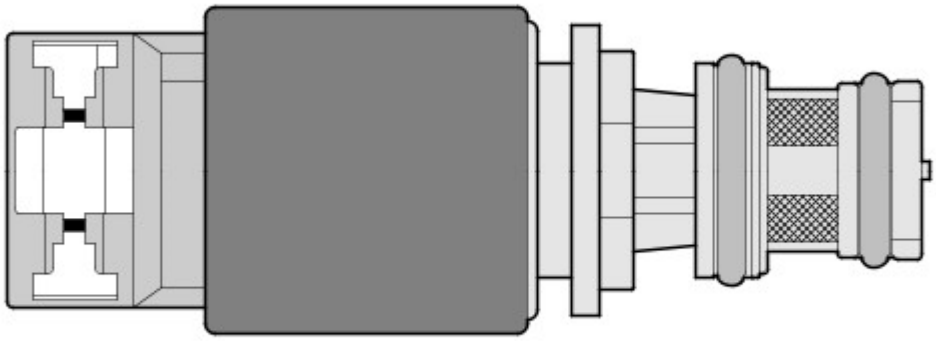

E42713

Six EPRS are located in the valve block. The solenoids are controlled by PWM signals from the TCM. The solenoids convert the electrical signals into hydraulic control pressure proportional to the signal to actuate the spool valves for precise transmission operation.

The following table shows EPRS and their associated functions:

EPRS	Function
1	Clutch A
2	Clutch B
3	Clutch C
4	Brake clutches D and E
5	System pressure control
6	Torque converter lock-up control

Solenoids EPRS 1, 3 and 6 supply a lower control pressure as the signal amperage increases and can be identified by a black connector cap. The TCM operates the solenoids using PWM signals. The TCM monitors engine load and clutch slip and varies the solenoid duty cycle accordingly. The solenoids have a 12 V operating voltage and a pressure range of 0 - 4.6 bar (0 - 67 lbf.in^2).

Solenoids EPRS 2, 4 and 5 supply a higher control pressure as the signal amperage increases and can be identified by a green connector cap. The solenoids are normally open, regulating flow solenoid valves. The operates the solenoids using a PWM earth proportional to the required increasing or decreasing clutch pressures. The solenoids have a 12 V operating voltage and a pressure range of 4.6 - 0 bar (67 - 0 lbf.in^2).

The resistance of the solenoid coil winding for solenoid is between 26 to 30.4 ohms at 20 °C (68 °F).

Control Solenoid

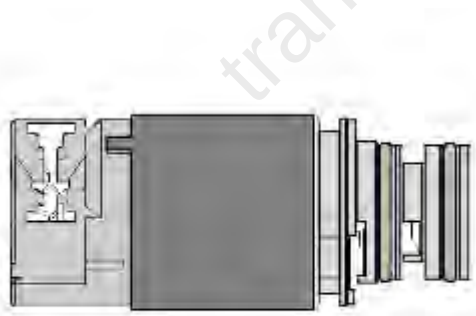

E42714

A shift control SV (solenoid valve) is located in the valve block. The solenoid is controlled by the TCM and converts electrical signals into hydraulic control signals to control clutch application.

The shift control solenoid is an open/closed, on/off solenoid which is controlled by the TCM switching the solenoid to earth. The TCM also supplies power to the solenoid. The TCM energizes the solenoid in a programmed sequence for clutch application for gear ratio changes and shift control.

The resistance of the solenoid coil winding for solenoid is between 26 to 30.4 ohms at 20 °C (68 °F).

Sensors

Speed Sensors

transmissionmanuals.com

The turbine speed sensor and the output shaft speed sensor are Hall effect type sensors located in the Mechatronic valve block and are not serviceable items. The TCM monitors the signals from each sensor to determine the input (turbine) speed and the output shaft speed.

The turbine speed is monitored by the TCM to calculate the slip of the torque converter clutch and internal clutch slip. This signal allows the TCM to accurately control the slip timing during shifts and adjust clutch application or release pressure for overlap shift control.

The output shaft speed is monitored by theTCM and compared to engine speed signals received on the CAN bus from the ECM. Using a comparison of the two signals the TCM calculates the transmission slip ratio for plausibility and maintains adaptive pressure control.

Temperature Sensor

The temperature sensor is also located in the Mechatronic valve block. The TCM uses the temperature sensor signals to determine the temperature of the transmission fluid. These signals are used by the TCM to control the transmission operation to promote faster warm-up in cold conditions or to assist with fluid cooling by controlling the transmission operation when high fluid temperatures are experienced. If the sensor fails, the TCM will use a default value and a fault code will be stored in the TCM.

Damper

There is 1 damper located in the valve housing. The damper is used to regulate and dampen the regulated pressure supplied via EPRS 5. The damper is load dependent through modulation of the damper against return spring pressure.

The damper comprises a piston, a housing bore and a spring. The piston is subject to the pressure applied by the spring. The bore has a connecting port to the function to which it applies. Fluid pressure applied to the applicable component (i.e. a clutch) is also subjected to the full area of the piston, which moves against the opposing force applied by the spring. The movement of the piston creates an action similar to a shock absorber, momentarily delaying the build up of pressure in the circuit. This results in a more gradual application of clutches improving shift quality.

Spool Valves

The valve block contains 21 spool valves which control various functions of the transmission. The spool valves are of conventional design and are operated by fluid pressure.

Each spool valve is located in its spool bore and held in a default (unpressurized) position by a spring. The spool bore has a number of ports which allow fluid to flow to other valves and clutches to enable transmission operation. Each spool has a piston which is waisted to allow fluid to be diverted into the applicable ports when the valve is operated.

When fluid pressure moves a spool, 1 or more ports in the spool bore are covered or uncovered. Fluid is prevented from flowing or is allowed to flow around the applicable waisted area of the spool and into another uncovered port. The fluid is either passed through galleries to actuate another spool, operate a clutch or is returned to the fluid pan.

DRIVE CLUTCHES

Multiplate Drive or Brake Clutch – Typical

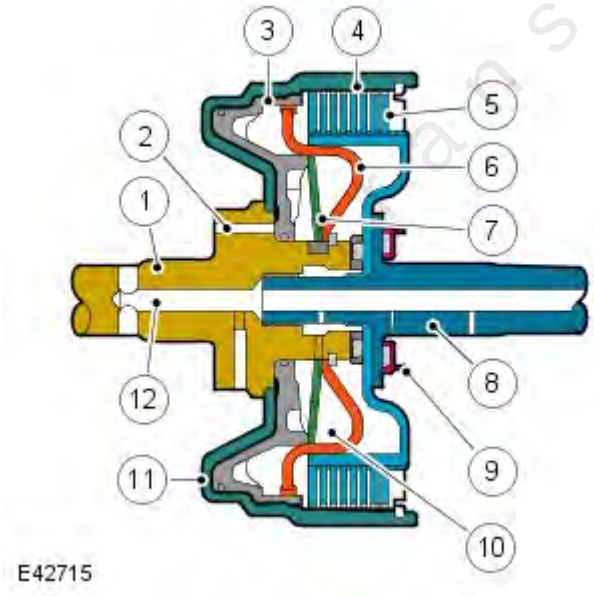

Item	Part Number	Description
1	-	Input shaft
2	-	Main pressure supply port
3	-	Piston
4	-	Cylinder – external plate carrier
5	-	Clutch plate assembly
6	-	Baffle plate
7	-	Diaphragm spring
8	-	Output shaft
9	-	Bearing

10	-	Dynamic pressure equalization chamber
11	-	Piston chamber
12	-	Lubrication channel

There are three drive clutches and two brake clutches used in the ZF 6HP28 transmission. Each clutch comprises one or more friction plates dependent on the output controlled. A typical clutch consists of a number of steel outer plates and inner plates with friction material bonded to each face.

On 3.0L diesel models, the uprated transmission includes additional clutch plates to enable the transmission to manage the additional power output from these engines.

The clutch plates are held apart mechanically by a diaphragm spring and hydraulically by dynamic pressure. The pressure is derived from a lubrication channel which supplies fluid to the bearings etc. The fluid is passed via a drilling in the output shaft into the chamber between the baffle plate and the piston. To prevent inadvertent clutch application due to pressure build up produced by centrifugal force, the fluid in the dynamic pressure equalization chamber overcomes any pressure in the piston chamber and holds the piston off the clutch plate assembly.

When clutch application is required, main pressure from the fluid pump is applied to the piston chamber from the supply port. This main pressure overcomes the low pressure fluid present in the dynamic pressure equalization chamber. The piston moves, against the pressure applied by the diaphragm spring, and compresses the clutch plate assembly. When the main pressure falls, the diaphragm spring pushes the piston away from the clutch plate assembly, disengaging the clutch.

PLANETARY GEAR TRAINS

The planetary gear trains used on the ZF 6HP28 transmission comprise a single web planetary gear train and a double web planetary gear train. These gear trains are known as Lepelletier type gear trains and together produce the six forward gears and the one reverse gear.

Single Web Planetary Gear Train

The single web planetary gear train comprises:

- Sunwheel
- Four planetary gears
- Planetary gear carrier (spider)
- Ring gear or annulus.

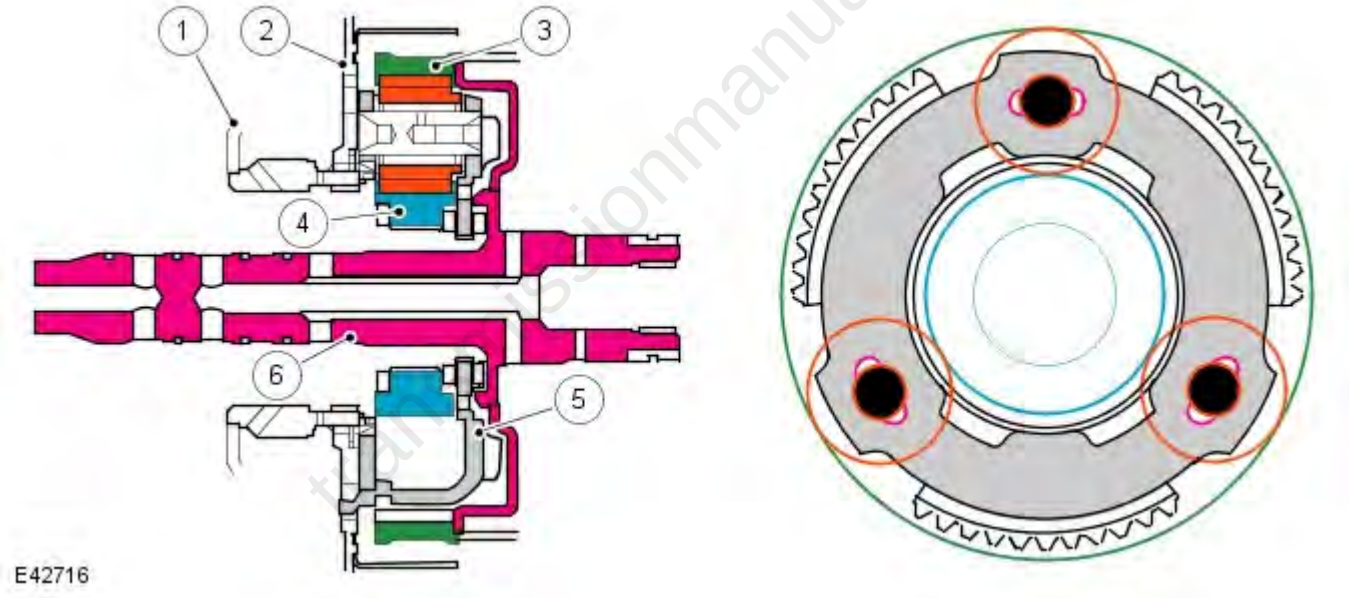

Item	Part Number	Description
1	-	Cylinder
2	-	Baffle plate
3	-	Ring gear
4	-	Sun gear
5	-	Planetary gear spider
6	-	Torque converter input shaft

Torque Converter Input Shaft

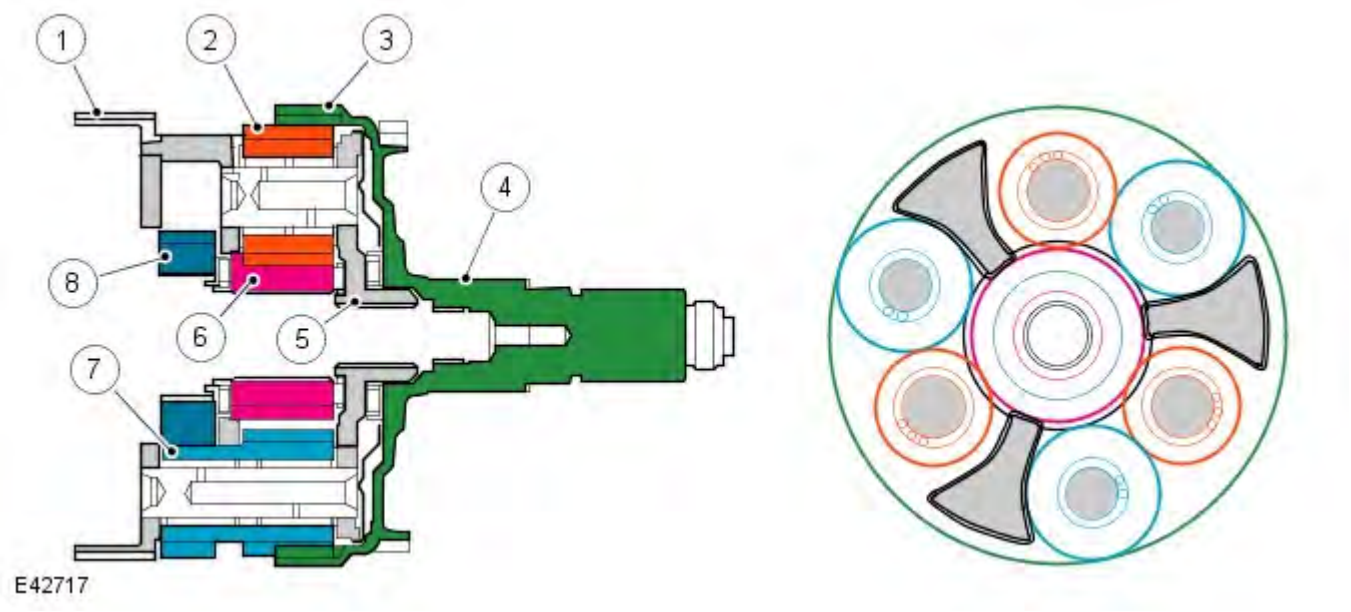

Item	Part Number	Description
1	-	Planetary gear spider
2	-	Planetary gears (short)
3	-	Ring gear
4	-	Output shaft
5	-	Planetary gear carrier
6	-	Sunwheel
7	-	Double planetary gears (long)
8	-	Sunwheel

The double planetary gear train comprises:

- Two sunwheels
- Three short planetary gears
- Three long planetary gears
- Planetary gear carrier
- Ring gear or annulus

TRANSMISSION CONTROL MODULE

The TCM is an integral part of the Mechatronic valve block which is located at the bottom of the transmission, within the fluid pan. The TCM is the main controlling component of the transmission.

The TCM processes signals from the transmission speed and temperature sensors, ECM and other vehicle systems. From the received signal inputs and pre-programmed data, the module calculates the correct gear, torque converter clutch setting and optimum pressure settings for gear shift and lock-up clutch control.

CONTROL DIAGRAM

• NOTE: A = Hardwired; B = K bus; D = High speed CAN bus O = LIN (local interconnect network) bus.

transmissionmanuals.com

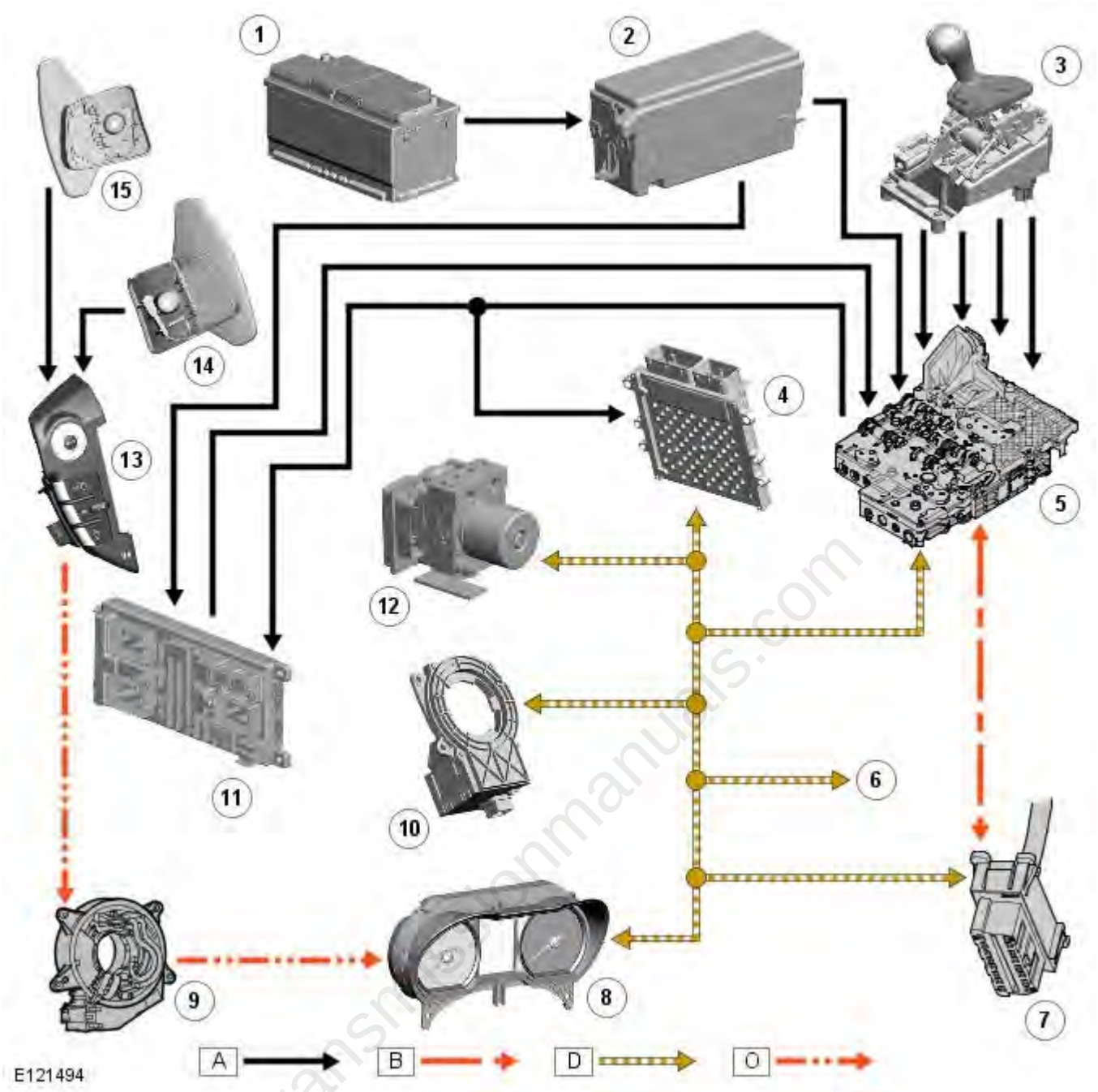

Item	Part Number	Description
1	-	Battery
2	-	EJB (engine junction box)
3	-	Selector lever
4	-	ECM (engine control module)
5	-	TCM
6	-	To other systems
7	-	Diagnostic socket
8	-	Instrument cluster
9	-	Clockspring
10	-	Steering angle sensor
11	-	CJB (central junction box)
12	-	ABS module
13	-	Steering wheel LH switchpack
14	-	Upshift paddle switch
15	-	Downshift paddle switch

OPERATION

Power Flows

Operation of the transmission is controlled by the TCM, which electrically activates various solenoids to control the transmission gear selection. The sequence of solenoid activation is based on programmed information in the TCM memory and physical transmission operating conditions such as vehicle speed, throttle position, engine load and selector lever position.

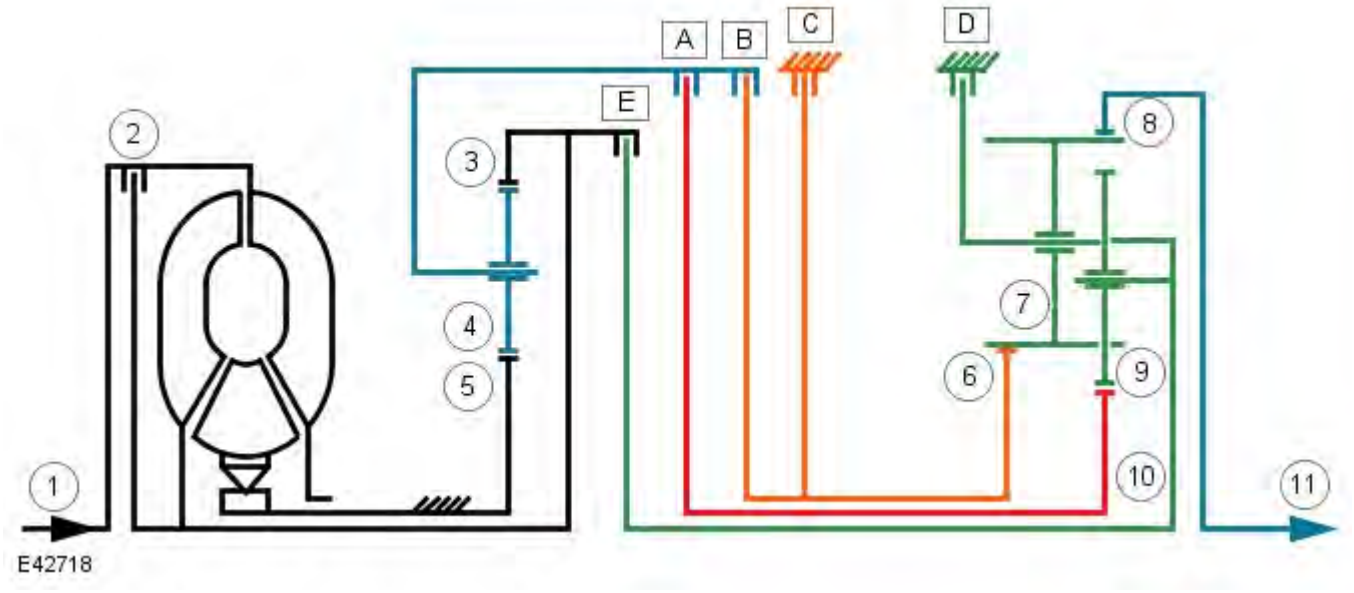

Item	Part Number	Description
1	-	Torque input from engine
2	-	Torque converter lock-up clutch
3	-	Single web planetary gear carrier
4	-	Single web planetary gears
5	-	Single web sunwheel 1
6	-	Double web sunwheel 2
7	-	Double web planetary gears - long
8	-	Double web planetary gear carrier
9	-	Double web planetary gears - short
10	-	Double web sunwheel 3
11	-	Torque output from transmission
A	-	Multiplate clutch
B	-	Multiplate clutch
C	-	Multiplate brake
D	-	Multiplate brake
E	-	Multiplate clutch

Engine torque is transferred, via operation of single or combinations of clutches to the 2 planetary gear trains. Both gear trains are controlled by reactionary inputs from brake clutches to produce the 6 forward gears and 1 reverse gear. The ratios are as follows:

Gear	1st	2nd	3rd	4th	5th	6th	Reverse
Ratio	4.171	2.340	1.521	1.143	0.867	0.691	3.403

Shift Elements

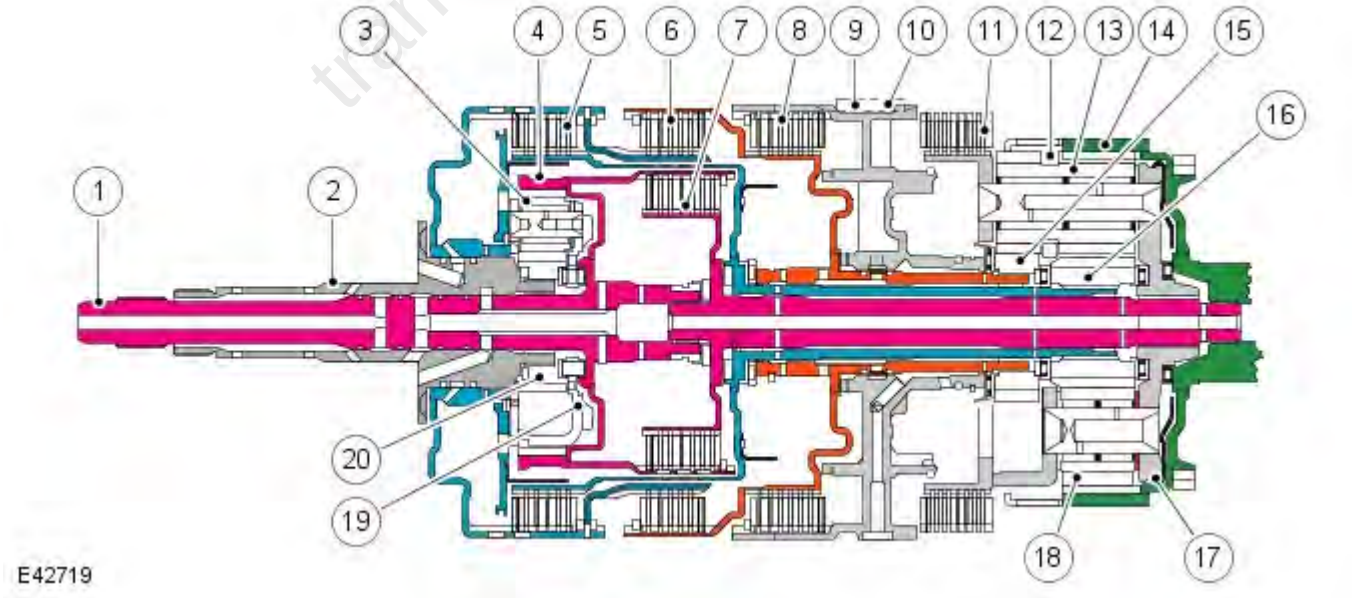

Item	Part Number	Description
1	-	Turbine shaft
2	-	Stator shaft
3	-	Single web planetary gear train

4	-	Ring gear 1
5	-	Clutch A
6	-	Clutch B
7	-	Clutch E
8	-	Brake clutch C
9	-	Fixed connection to transmission housing
10	-	Shaft key
11	-	Brake clutch D
12	-	Double web planetary gear train
13	-	Planetary gears - long
14	-	Ring gear 2
15	-	Sunwheel 2
16	-	Sunwheel 3
17	-	Double web planetary gear carrier
18	-	Planetary gears - short
19	-	Single web planetary gear carrier
20	-	Sunwheel 1

The shift elements are three rotating multiplate clutches (A, B and E) and two fixed multiplate brakes © and D). All shifts from 1st to 6th gears are power-on overlapping shifts. Overlapping shifts can be described as one of the clutches continuing to transmit drive at a lower main pressure until the next required clutch is able to accept the input torque.

The shift elements, clutches and brakes are actuated hydraulically. Fluid pressure is applied to the required clutch and/or brake, pressing the plates together and allowing drive to be transmitted through the plates. The purpose of the shift elements is to perform power-on shifts with no interruption to traction and smooth transition between gear ratios.

Power Flow 1st Gear

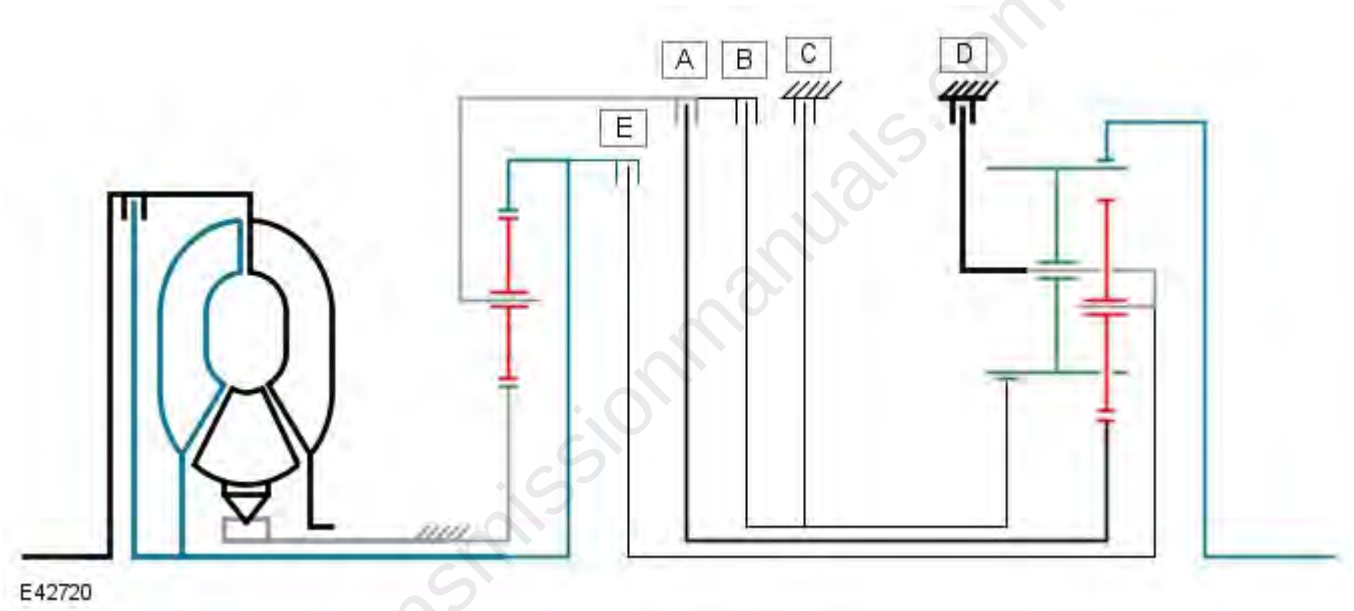

The selector lever and the selector valve spool are in the 'D' position. Engine torque is transmitted from the torque converter turbine shaft to the ring gear 1 of the single web planetary gear train and the outer plate carrier of clutch 'E'.

Ring gear 1 drives the planetary gears which rotate around sunwheel 1. This drives the planetary gear carrier 1 and also the outer plate carrier of clutch 'A' and the inner plate carrier of clutch 'B'.

When clutch 'A' is engaged, sunwheel 3 in the double web planetary gear train is driven and meshes with the short planetary gears.

The double web planetary gear train is locked against the transmission housing by brake 'D'. This allows ring gear 2 (output shaft) to be driven in the same direction as the engine via the long planetary gears.

- NOTE: Refer to 'Shift Elements' illustration for key

transmissionmanuals.com

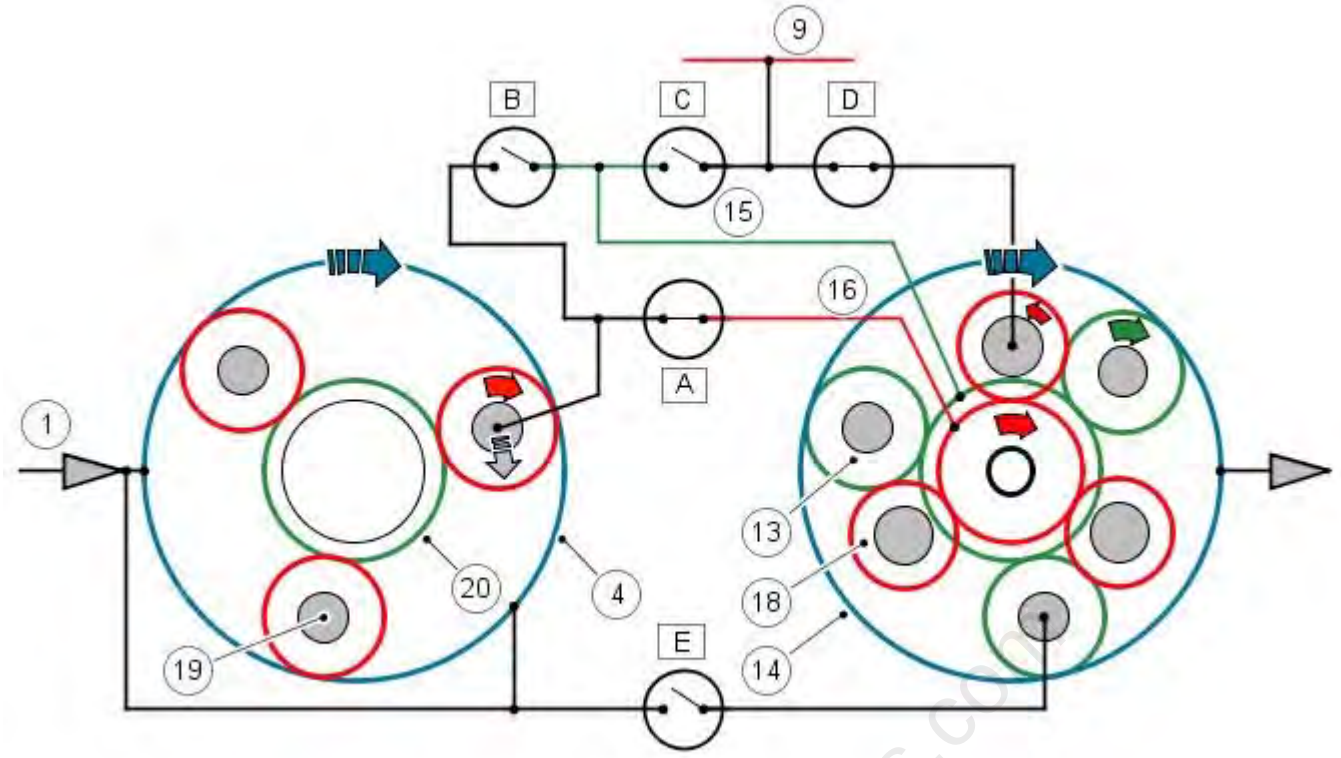

E42721

Power Flow 2nd Gear

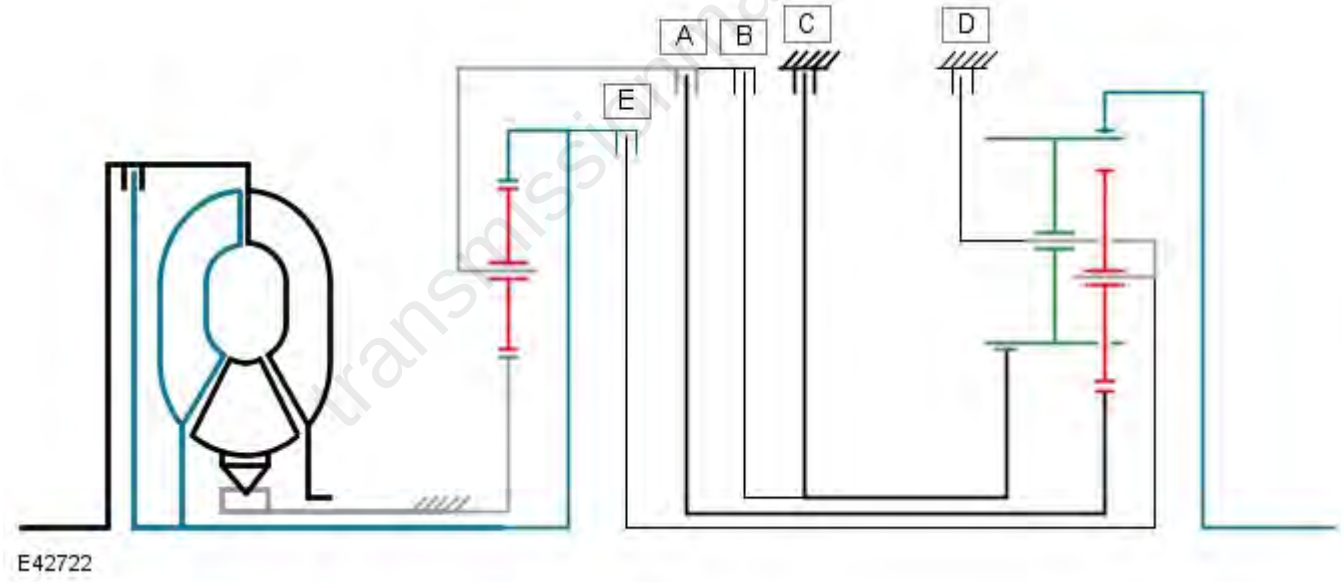

E42722

The selector lever and the selector spool valve are in the 'D' position. Engine torque is transmitted from the torque converter turbine shaft to the ring gear 1 of the single web planetary gear train and the outer plate carrier of clutch 'E'.

Ring gear 1 drives the planetary gears which rotate around sunwheel 1. This drives the planetary gear carrier 1 and also the outer plate carrier of clutch 'A' and the inner plate carrier of clutch 'B'.

When clutch 'A' is engaged, sunwheel 3 in the double web planetary gear train is driven and meshes with the short planetary gears.

Sunwheel 2 is locked to the transmission housing by brake clutch 'C'. The long planetary gears, which are also meshed with the short planetary gears, roll around the fixed sunwheel 2 and transmit drive to the double web planetary gear train carrier and ring gear 2 in the direction of engine rotation.

- NOTE: Refer to 'Shift Elements' illustration for key

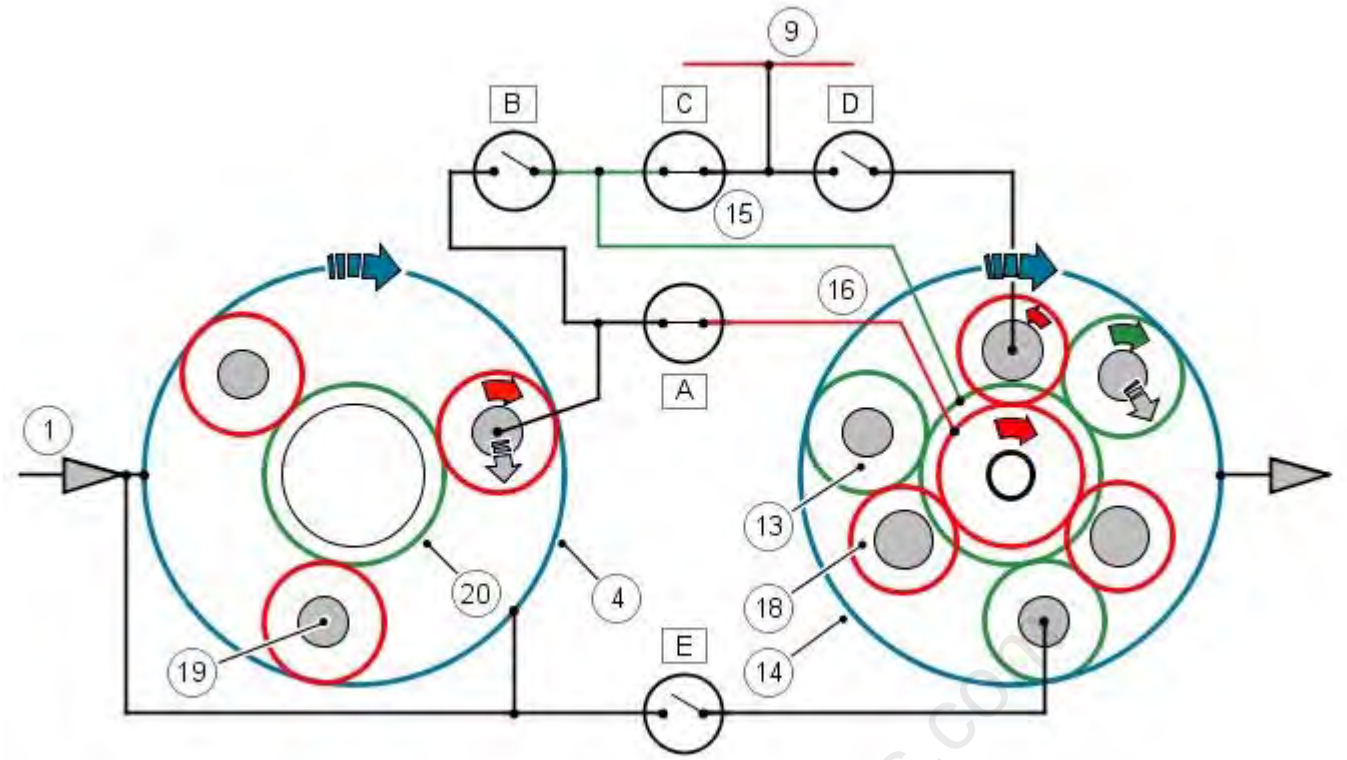

E42723

Power Flow 3rd Gear

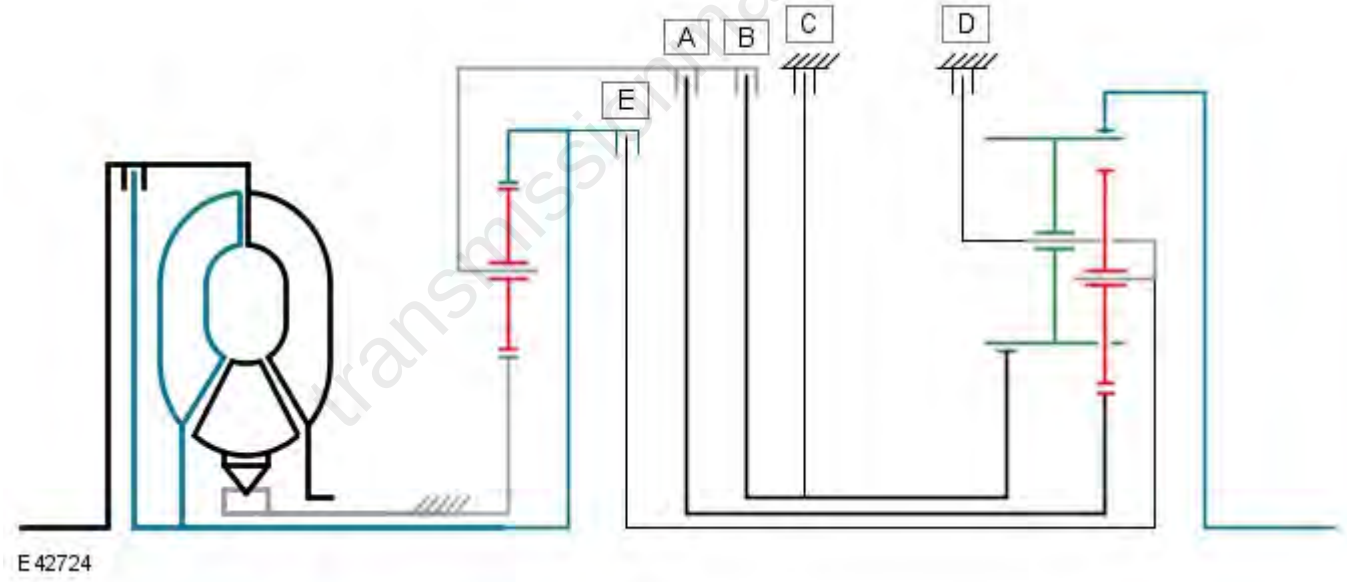

E42724

The selector lever and the selector spool valve are in the 'D' position. Engine torque is transmitted from the torque converter turbine shaft to the ring gear 1 of the single web planetary gear train and the outer plate carrier of clutch 'E'.

Ring gear 1 drives the planetary gears which rotate around sunwheel 1. This drives the planetary gear carrier 1 and also the outer plate carrier of clutch 'A' and the inner plate carrier of clutch 'B'.

When clutch 'A' is engaged, sunwheel 3 in the double web planetary gear train is driven and meshes with the short planetary gears.

Sunwheel 2 is driven via clutch 'B' which is engaged. The long planetary gears, which are also meshed with the short planetary gears, cannot roll around the fixed sunwheel 2 and therefore transmit drive to the locked double web planetary gear train carrier in the direction of engine rotation.

- NOTE: Refer to 'Shift Elements' illustration for key

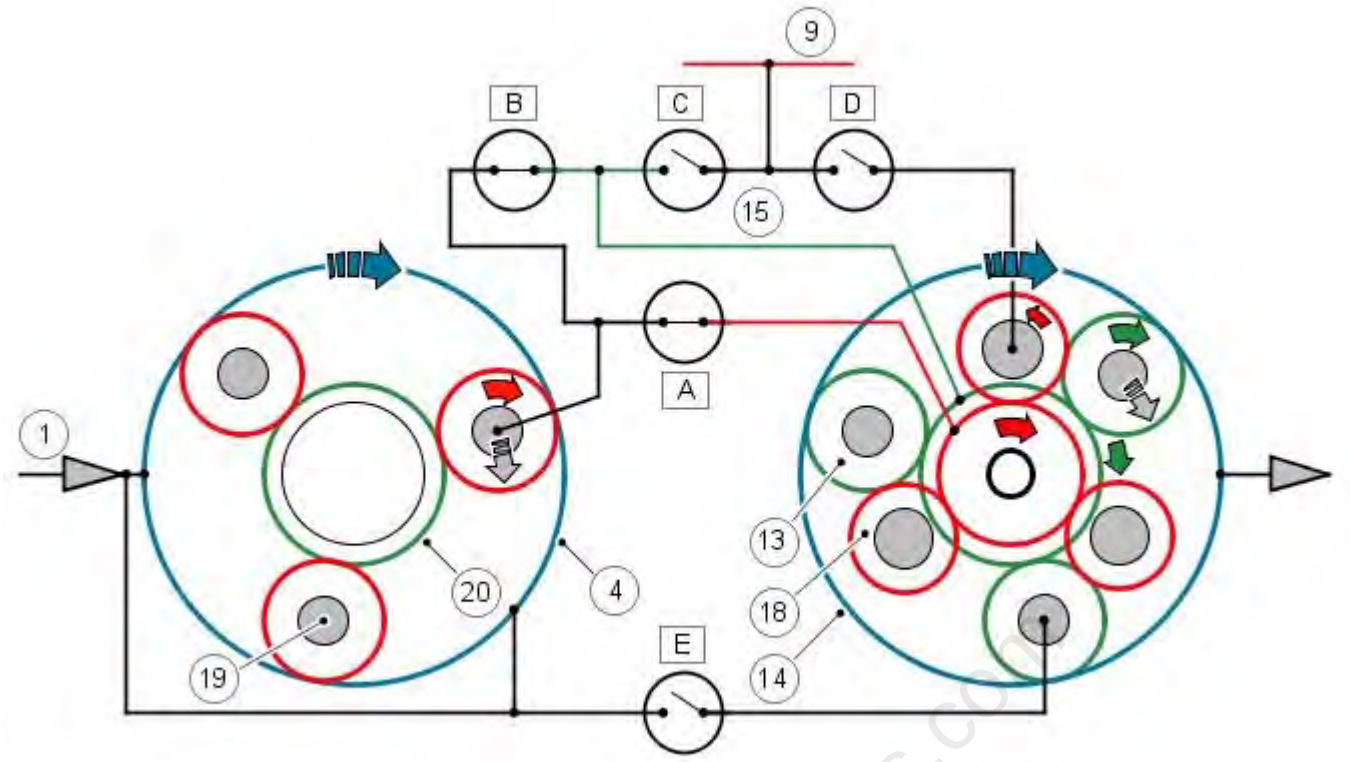

E42725

Power Flow 4th Gear

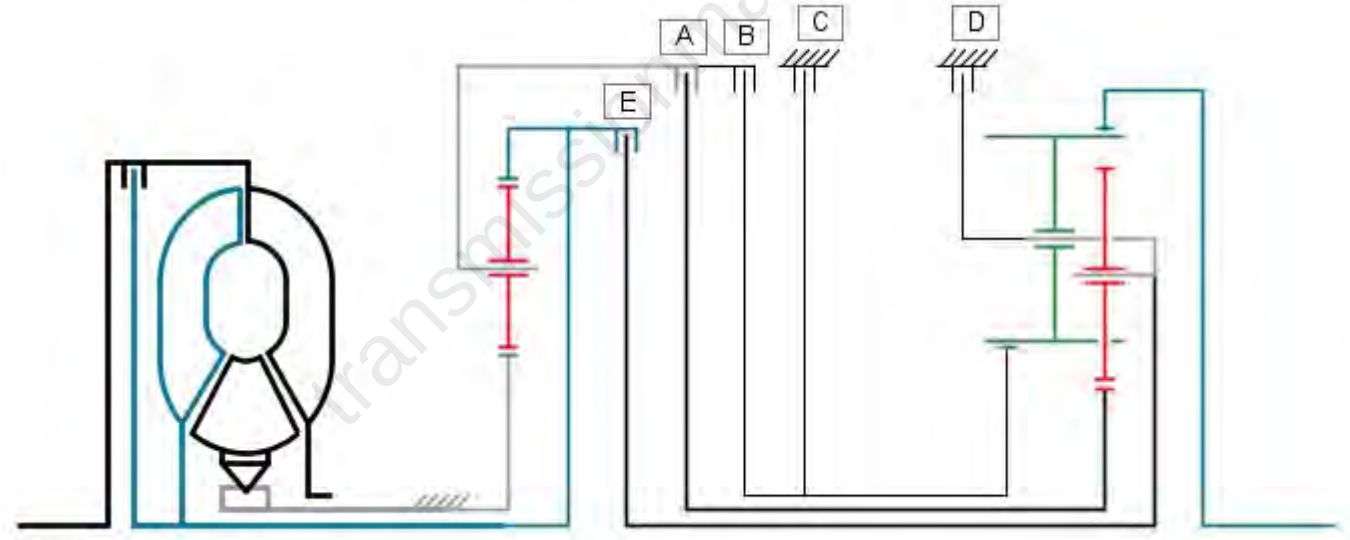

E42726

The selector lever and the selector spool valve are in the 'D' position. Engine torque is transmitted from the torque converter turbine shaft to ring gear 1 of the single web planetary gear train and the outer plate carrier of clutch 'E'.

Ring gear 1 drives the planetary gears which rotate around sunwheel 1. This drives the planetary gear carrier 1 and also the outer plate carrier of clutch 'A' and the inner plate carrier of clutch 'B'.

When clutch 'A' is engaged, sunwheel 3 in the double web planetary gear train is driven and meshes with the short planetary gears.

The double web planetary gear carrier is driven via clutch 'E' which is engaged. The long planetary gears, which are also meshed with the short planetary gears and the double web planetary gear carrier, drive ring gear 2 in the direction of engine rotation.

- NOTE: Refer to 'Shift Elements' illustration for key

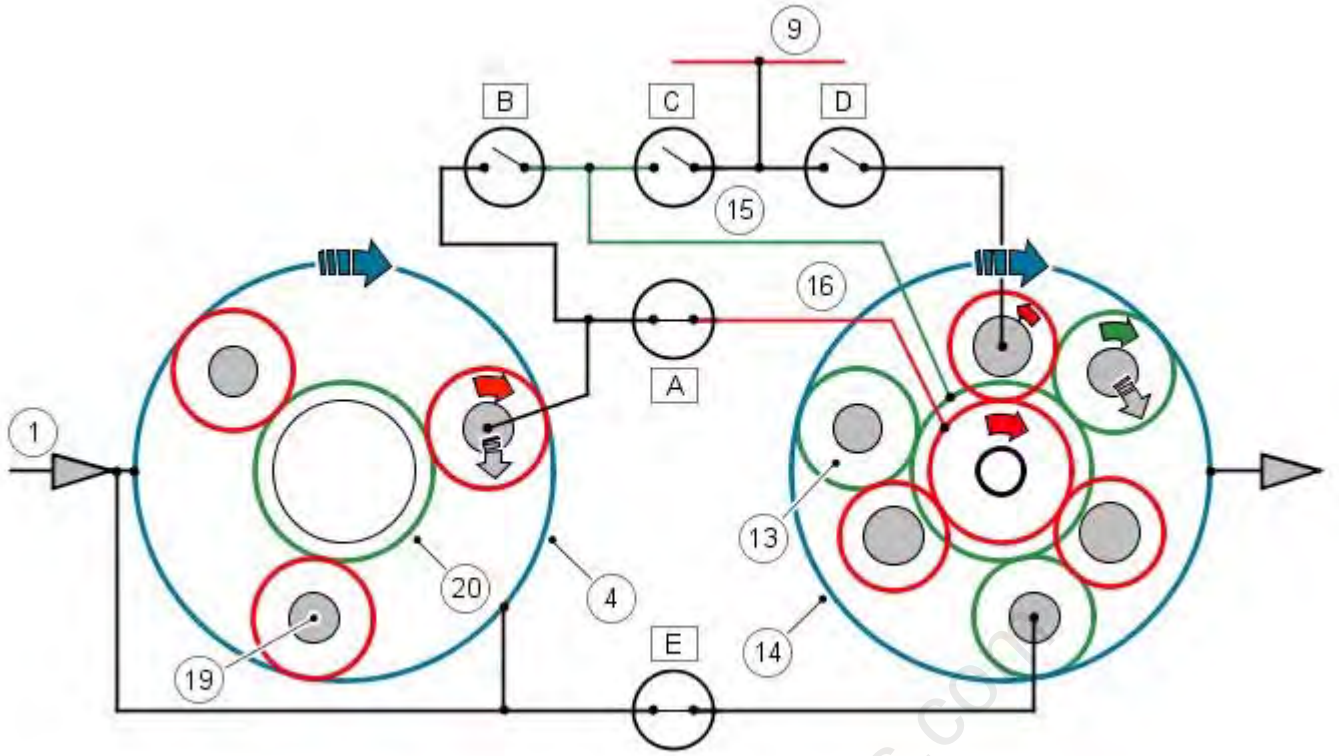

E42727

Power Flow 5th Gear

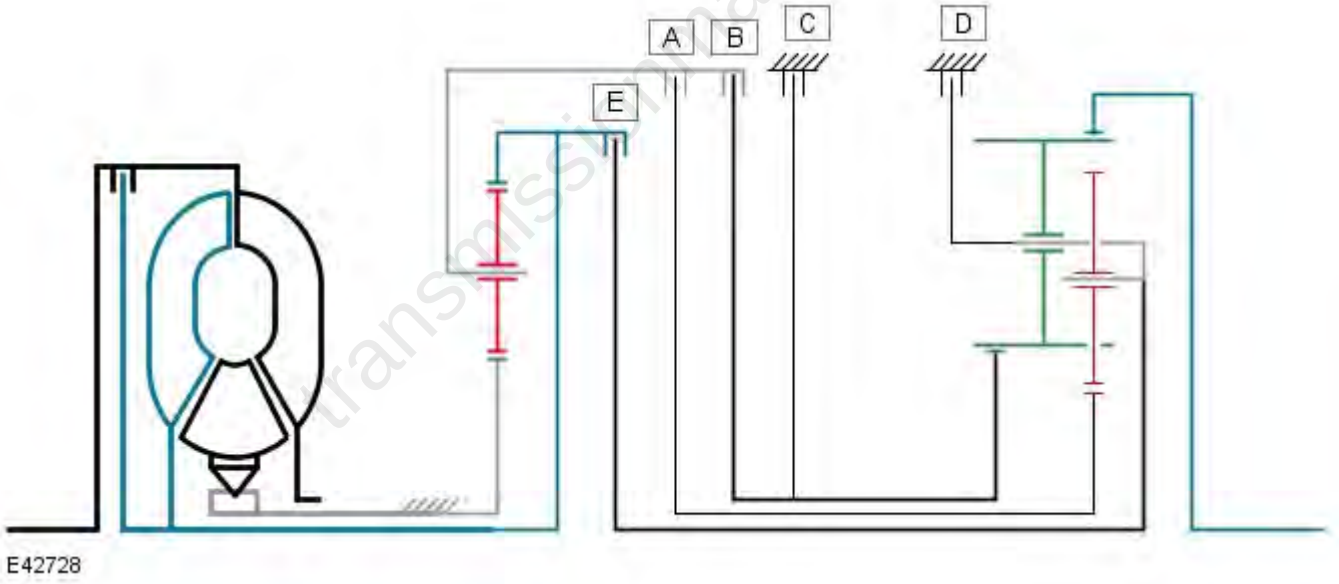

E42728

The selector lever and the selector spool valve are in the 'D' position. Engine torque is transmitted from the torque converter turbine shaft to ring gear 1 of the single web planetary gear train and the outer plate carrier of clutch 'E'.

Ring gear 1 drives the planetary gears which rotate around sunwheel 1. This drives the planetary gear carrier 1 and also the outer plate carrier of clutch 'A' and the inner plate carrier of clutch 'B'.

When clutch 'A' is engaged, sunwheel 3 in the double web planetary gear train is driven and meshes with the short planetary gears.

The long planetary gears, which are also meshed with the short planetary gears and the double web planetary gear carrier, drive ring gear 2 in the direction of engine rotation.

- NOTE: Refer to 'Shift Elements' illustration for key

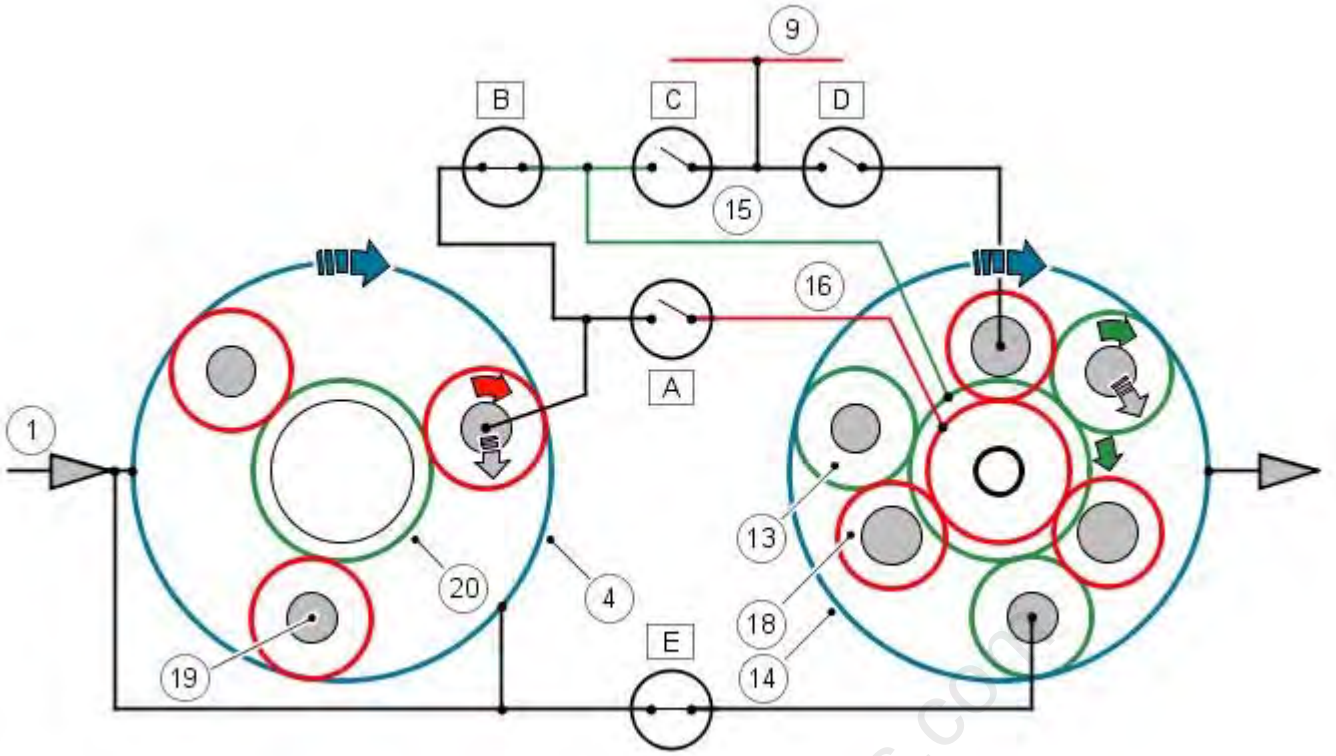

E42729

Power Flow 6th Gear

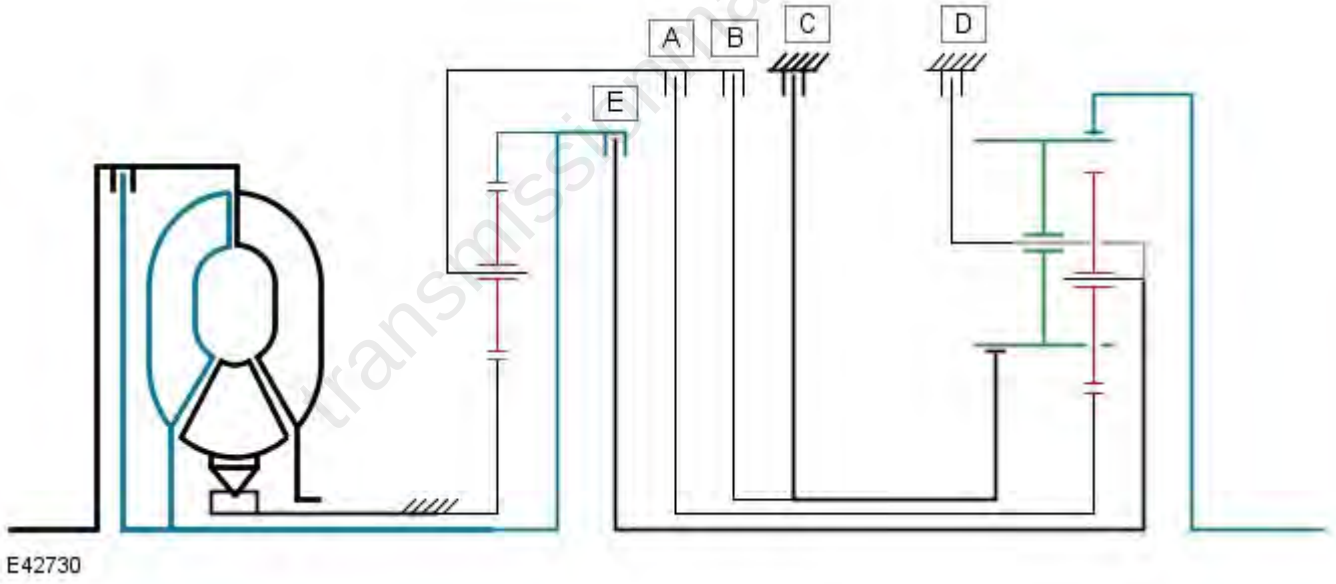

E42730

The selector lever and the selector spool valve are in the 'D' position. Engine torque is transmitted from the torque converter turbine shaft to ring gear 1 of the single web planetary gear train and the outer plate carrier of clutch 'E'.

Clutches 'A' and 'B' are released, removing the effect of the single web planetary gear train.

Clutch brake 'C' is applied which locks sunwheel 2 to the transmission housing.

Clutch 'E' is engaged and drives the double web planetary gear carrier. This causes the long planetary gears to rotate around the fixed sunwheel 2 and transmit drive to ring gear 2 which is driven in the direction of engine rotation.

- NOTE: Refer to 'Shift Elements' illustration for key

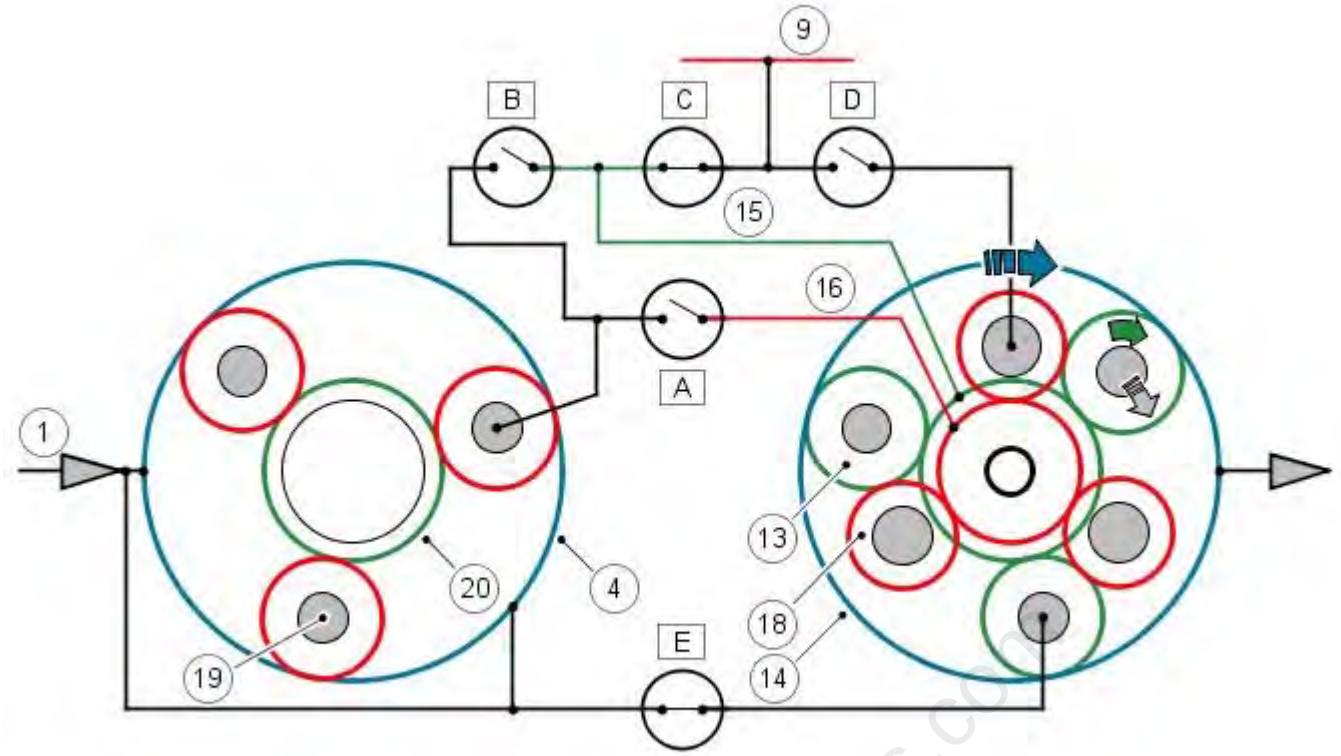

E42731

Power Flow Reverse Gear

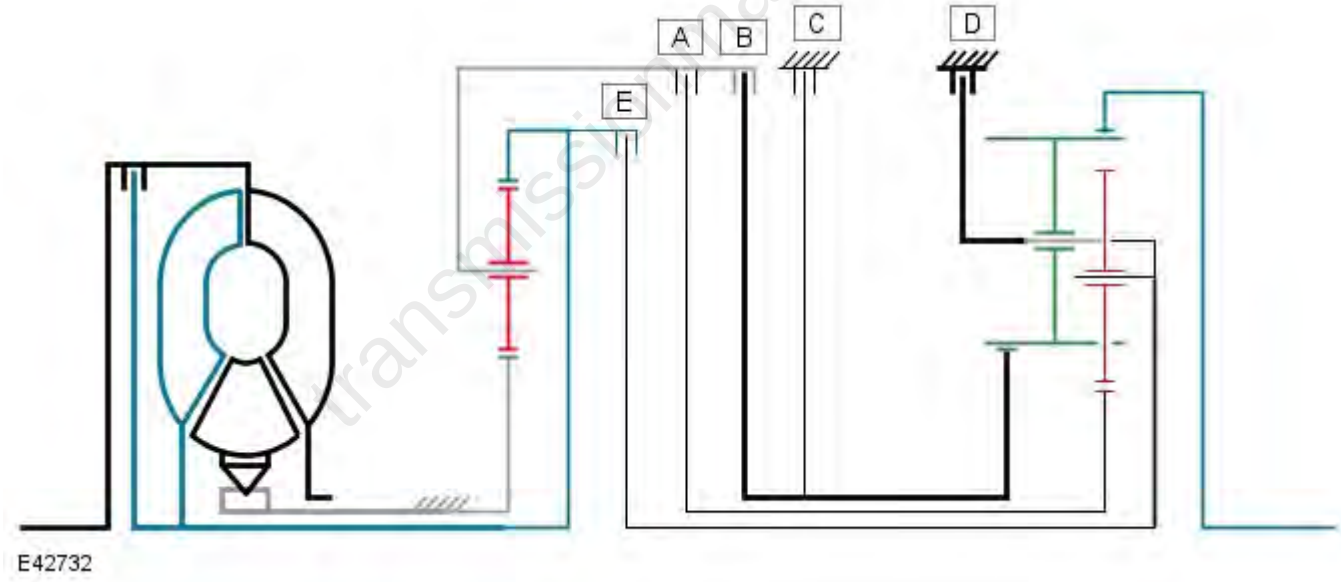

E42732

The selector lever and the selector spool valve are in the 'R' position. Engine torque is transmitted from the torque converter turbine shaft to ring gear 1 of the single web planetary gear train and the outer plate carrier of clutch 'E'.

Ring gear 1 drives the planetary gears of the single web planetary gear train which rotate around the fixed sunwheel 1. This transmits the drive to the single web planetary gear carrier, the outer plate carrier of clutch 'A' and the inner plate carrier of clutch 'B'.

With clutch 'B' applied, sunwheel 2 in the double web planetary gear train is driven and meshes with the long planetary gears.

The double web planetary gear carrier is locked to the transmission housing by brake clutch 'D'. This allows ring gear 2 to be driven in the opposite direction to engine rotation by the long planetary gears.

- NOTE: Refer to 'Shift Elements' illustration for key

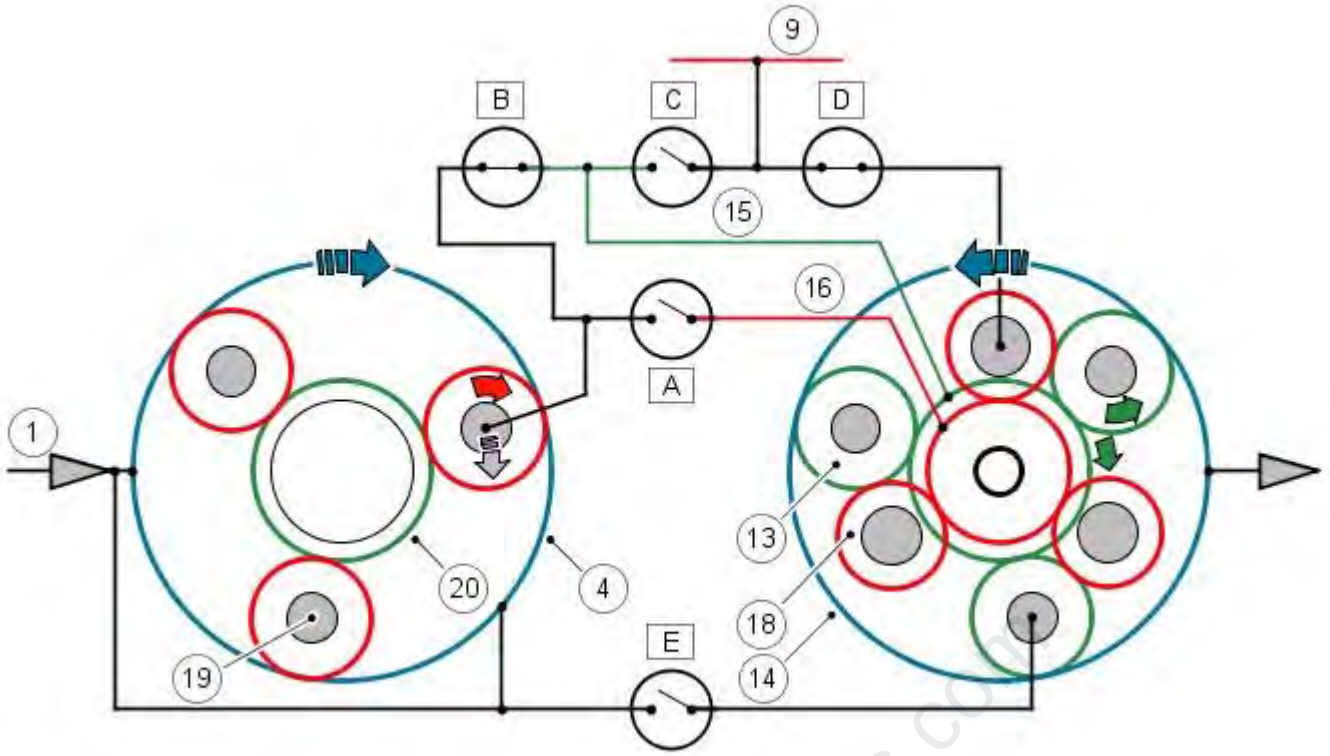

E42733

Instrument Cluster



E121495

Item	Part Number	Description
1	-	MIL (malfunction indicator lamp)
2	-	Message center
3	-	Transmission status display

The instrument cluster is connected to the TCM via the high speed CAN bus. Transmission status is transmitted by the TCM and displayed to the driver in one of two displays in the instrument cluster.
For additional information, refer to: Instrument Cluster (413-01 Instrument Cluster, Description and Operation).

Malfunction Indicator Lamp

The MIL (malfunction indicator lamp) is located in the tachometer of the instrument cluster. Transmission related faults which may affect the vehicle emissions will illuminate the MIL.

The MIL is illuminated by the ECM on receipt of a relevant fault message from the TCM on the high speed CAN. The nature of the fault can be diagnosed using Land Rover approved diagnostic equipment which reads the fault codes stored in the TCM memory.

Transmission Status Display

The transmission status display is located in the tachometer of the instrument cluster. The display shows the selector lever position or the selected gear when in manual and sport modes.

The following table shows the displays and their descriptions.

Symbol	Description
P	Park selected
R	Reverse selected
N	Neutral selected
D	Drive selected
s*	Sport mode selected (* = current gear)
1	1st gear selected (manual CommandShift mode)
2	2nd gear selected (manual CommandShift mode)
3	3rd gear selected (manual CommandShift mode)
4	4th gear selected (manual CommandShift mode)
5	5th gear selected (manual CommandShift mode)
6	6th gear selected (manual CommandShift mode)

Message Center

The message center is located in the center of the instrument cluster. The message center is a LCD (liquid crystal display) that relays vehicle status and operating information to the driver and can display messages relating to a number of vehicle systems. If a transmission fault occurs, the message GEARBOX FAULT is displayed in the message center.
For additional information, refer to: Information and Message Center (413-08 Information and Message Center, Description and Operation).

Transmission Control Module

The TCM outputs signals to control the shift control solenoid valve and the EPRS to control the hydraulic operation of the transmission.

The TCM processes signals from the transmission speed and temperature sensors, the selector lever, the ECM and other vehicle systems. From the received signal inputs and pre-programmed data, the TCM calculates the correct gear, torque converter clutch setting and optimum pressure settings for gear shift and lock-up clutch control.

The ECM supplies the engine management data over the high speed CAN bus. The TCM requires engine data to efficiently control the transmission operation, for example; flywheel torque, engine speed, accelerator pedal angle, engine temperature. The steering angle sensor and the ABS (anti-lock brake system) module also supply data to the TCM on the high speed CAN bus. The TCM uses data from these systems to suspend gear changes when the vehicle is cornering and/or the ABS module is controlling braking or traction control.

Using the signal inputs and the memorized data, the TCM control program computes the correct gear and torque converter lock-up clutch setting and the optimum pressure settings for gear shift and lock-up clutch control. Special output-side modules (power output stages, current regulator circuits), allow the TCM to control the solenoid valves and pressure regulators and consequently precisely control the hydraulics of the automatic transmission. In addition, the amount and duration of engine interventions are supplied to the engine management by way of the CAN bus.

The TCM determines the position of the selector lever using signals from:

- The selector switch in the transmission.
- The park lock and M/S (manual/sport) 'CommandShift' switches on the selector lever.

When the driver operates the steering wheel paddle switches the selections are sensed by the TCM, which then operates in the manual CommandShift mode. If the selector lever is in D, the CommandShift mode is temporary and will cancel after a time period or can be cancelled by pressing and holding the + paddle for approximately 2 seconds. If the selector lever is in the M/S position, the CommandShift mode is permanent and can only be cancelled by pressing and holding the + paddle for approximately 2 seconds or by moving the selector lever to the D position.

The TCM transmits the position of the selector lever and the selected gear on the high speed CAN bus. This information is shown in the gear selector display in the instrument cluster.

Engine Stall

If the vehicle stalls it will coast down in gear, with the transmission providing drive to the engine. A restart can be attempted at this point and the engine may start and the driver can continue.

If the coast down speed reduces such that the speed of the engine is less than 600 rev/min, the transmission will go to neutral, D illumination will flash in the instrument cluster. The driver needs to select neutral or park and then press the brake pedal to restart the engine.

If the start/stop button is pressed when driving, the message ENGINE STOP BUTTON PRESSED is displayed in the message center but there will be no change to the ignition state. If the driver requires to switch off the engine, the start/stop button must be pressed for a second time. The engine will be stopped and will be back driven by the transmission as the vehicle coasts down.

transmissionmanuals.com

Published: 11-May-2011

Automatic Transmission / Transaxle - V8 5.0L Petrol / TDV6 3.0L Diesel - Diagnostics

Diagnosis and Testing

Principle of Operation

For a detailed description of the automatic transmission/transaxle system and operation, refer to the relevant Description and Operation sections in the workshop manual.

Fluid Level and Condition Check

CAUTION: The vehicle should not be driven if the fluid level is low as internal failure can result.

• NOTE: The transmission fluid temperature must not be allowed to exceed 50°C (122°F) whilst checking level. Should the temperature rise above this figure, abort the check and allow the transmission fluid to cool to below 30°C (86°F).

This vehicle is not equipped with a fluid level indicator. An incorrect level may affect the transmission operation and could result in transmission damage. To correctly check and add fluid to the transmission. Refer to the relevant section in the workshop manual.

High Fluid Level

A fluid level that is too high may cause the fluid to become aerated due to the churning action of the rotating internal parts. This will cause erratic control pressure, foaming, loss of fluid from the vent tube and possible transmission damage. If an overfill condition is identified, with the engine at idle ensure the fluid temperature is within the specified range and allow the excess fluid to drain until a small thread of fluid runs from the filler/level plug hole.

Low Fluid Level

A low fluid level could result in poor transmission engagement, slipping, or damage. This could also indicate a leak in one of the transmission seals or gaskets.

Adding Fluid

CAUTION: The use of any other type of transmission fluid other than that specified can result in transmission damage.

If fluid needs to be added, add fluid in 0.50 liter increments through the fill hole opening. Do not overfill the fluid. For fluid type, refer to the Specification section in the workshop manual.

Fluid Condition Check

1. **1.** Check the fluid level.
2. **2.** Observe the color and the odor of the fluid. The color under normal circumstances should be like honey, not dark brown or black.
3. **3.** Allow the fluid to drip onto a facial tissue and examine the stain.
4. **4.** If evidence of solid material is found, the transmission fluid pan should be removed for further inspection.

NOTE: In the event of a transmission unit replacement for internal failure, the oil cooler and pipes must also be replaced.

Inspection and Verification

CAUTION: Diagnosis by substitution from a donor vehicle is **NOT** acceptable. Substitution of control modules does not guarantee confirmation of a fault, and may also cause additional faults in the vehicle being tested and/or the donor vehicle.

1. **1.** Verify the customer concern.
2. **2.** Visually inspect for obvious signs of damage and system integrity.

Visual Inspection

Mechanical	Electrical	Hydraulic
• Damaged/stuck shift mechanism • Damaged automatic transmission casing	• Blown fuse(s) • Damaged, loose or corroded connectors • Wiring harness	• Fluid level too high/low • Poor condition of fluid • Fluid leak

3. **3.** If an obvious cause for an observed or reported concern is found, correct the cause (if possible) before proceeding to the next step.
4. **4.** If the cause is not visually evident check for Diagnostic Trouble Codes (DTCs) and refer to the DTC Index.

DTC Index

transmissionmanuals.com

For a list of Diagnostic Trouble Codes (DTCs) that could be logged on this vehicle, please refer to Section 100-00.
REFER to: Diagnostic Trouble Code (DTC) Index - DTC: Transmission Control Module (TCM) - Siemens (100-00 General Information, Description and Operation).

transmissionmanuals.com

Published: 11-May-2011

Automatic Transmission / Transaxle - V8 5.0L Petrol / TDV6 3.0L Diesel - Transmission Fluid Level Check

General Procedures

Special Tool(s)

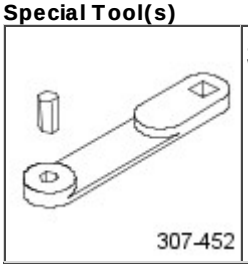	307-452 Wrench, Transmission Filler Plug

Check

- WARNINGS:

Observe due care when draining, as the fluid can be very hot.

Observe due care when working near a hot exhaust system.

- NOTE: Some variation in the illustrations may occur, but the essential information is always correct.

1.
   - The following steps must be observed before starting the transmission fluid level check.
   - The vehicle must be on a horizontal ramp.
   - The parking brake must be applied.
   - The engine must be running for 2 minutes with the transmission control switch (TCS) in the "P" position.

2. **2.** CAUTION: Make sure that the transmission fluid temperature is below 30 degrees before starting the fluid level check.

   Connect the diagnostic tool to the vehicle.

3.
   - Start the engine.
   - Apply, and hold, the footbrake.
   - Move the selector lever from 'P' through all gear positions, pausing in each gear position for 2-3 seconds and return to the 'P' position.

4. **4.** WARNING: Make sure to support the vehicle with axle stands.

   Raise and support the vehicle.

transmissionmanuals.com

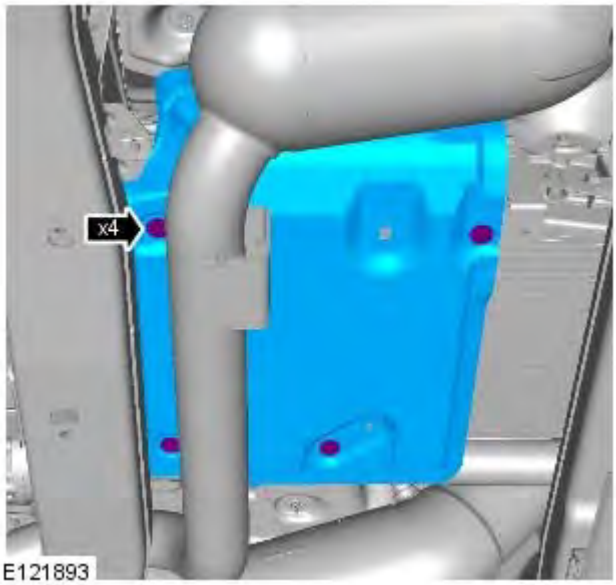

5. *Torque:* 9 Nm

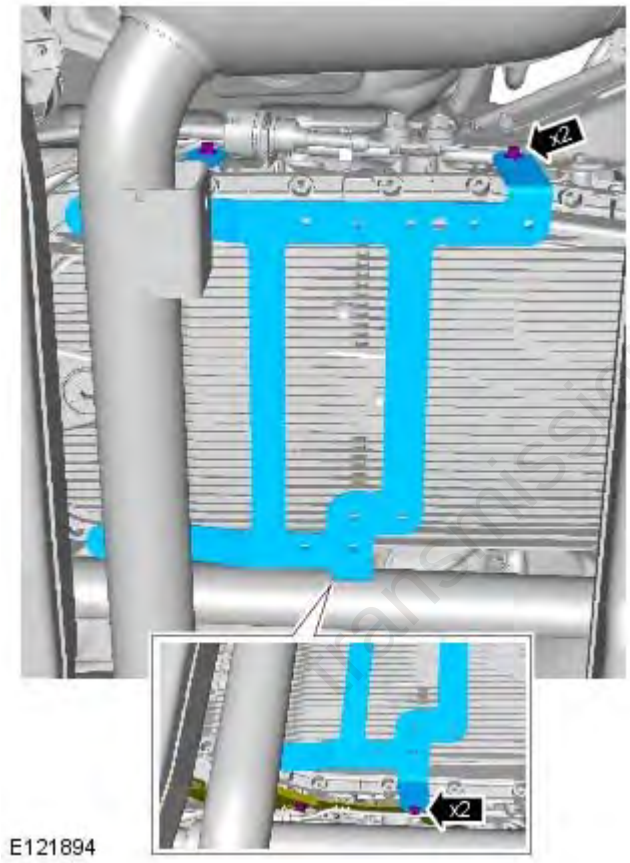

6. *Torque:* 9 Nm

7. Place a suitable container under the transmission fluid fill plug.

manualsohmanuals.com

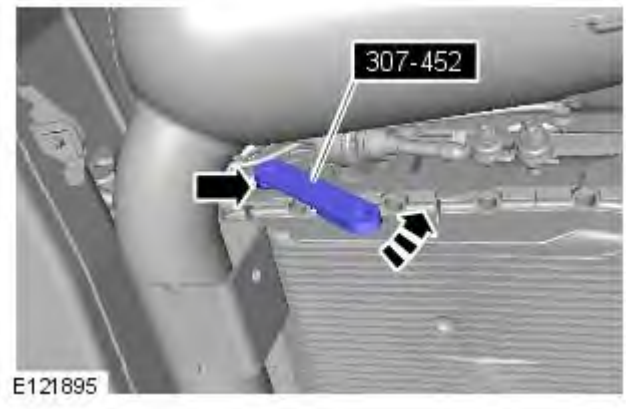

8. **8.** WARNINGS:

Observe due care when draining, as the fluid can be very hot.

Observe due care when working near a hot exhaust system.

• CAUTIONS:

The transmission fluid level must only be checked when the temperature of the fluid is between 30 degrees and 50 degrees. The fluid level obtained will be incorrect if the reading is outside this temperature range.

Discard the seal.

- *Special Tool(s):* 307-452
- Clean the area around the transmission fluid level plug.

Adjustment

• WARNINGS:

Observe due care when draining, as the fluid can be very hot.

Observe due care when working near a hot exhaust system.

• NOTE: Some variation in the illustrations may occur, but the essential information is always correct.

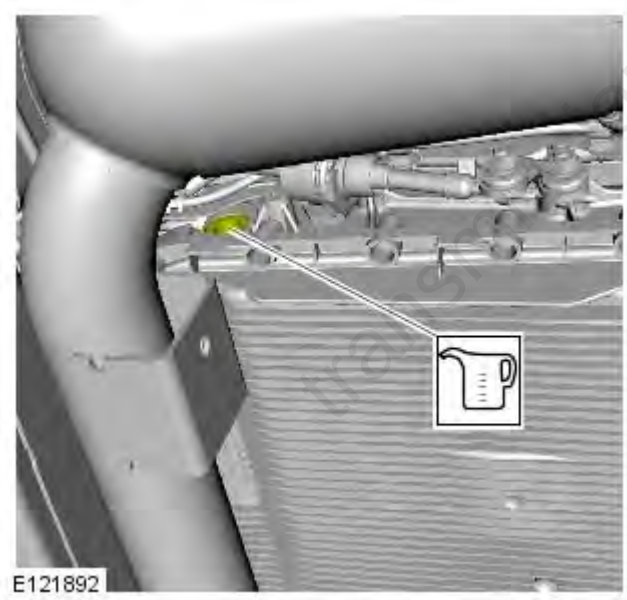

1. **9.** NOTE: Use transmission fluid meeting Land Rover specification.

   If the transmission fluid does not come out of the transmission fluid fill plug hole the transmission fluid level is insufficient. If this is the case add the transmission fluid in 0.5 liter units into the transmission fluid fill plug hole until fluid comes out.

manualsonmanuals.com

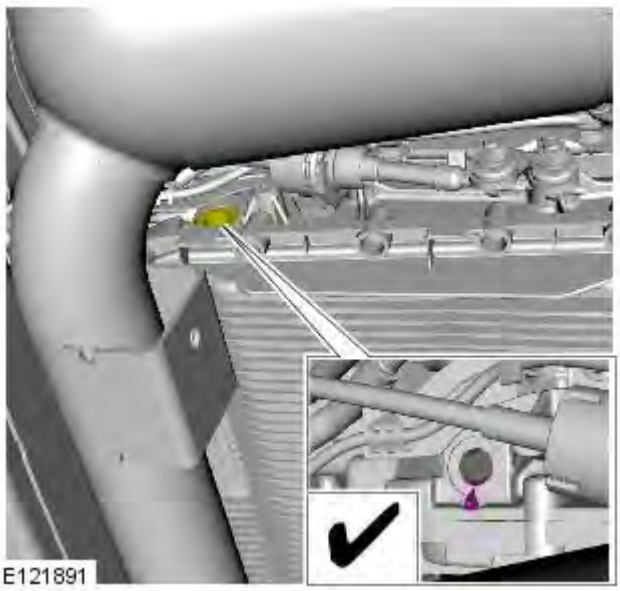

2. **10.** NOTE: Make sure the transmission fluid temperature does not exceed 50 °C (122 °F). If the transmission fluid temperature does exceed 50 °C (122 °F) stop the transmission fluid level check and allow the transmission fluid to cool until the temperature is below 30 °C (86 °F).

   Allow the transmission fluid to drain from the transmission fluid filler plug hole until the flow almost stops.

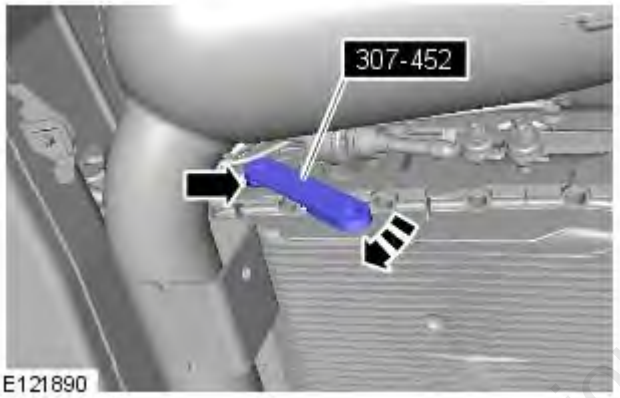

3. **11.** NOTE: Install a new sealing washer.

   Using the special tool, install the new transmission fluid fill plug.

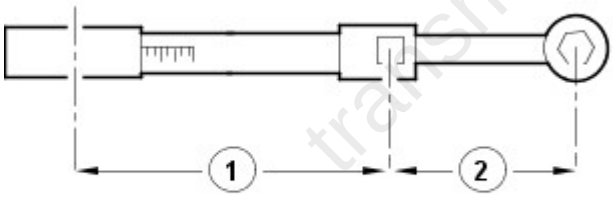

4. **12.** CAUTION: Make sure the transmission fluid fill plug is tightened to the correct specification. Failure to follow this instruction may result in damage to the vehicle.

   - To make sure the transmission fill plug is torqued to the correct specification. Using the special tool and torque wrench the following calculation steps must be followed.
   - Step 1. Multiply 35 Nm by the effective length of the torque wrench (1).
   - Step 2. Add the effective length of the special tool (2) to the effective length of the torque wrench (1).
   - Step 3. Divide the total of step 1 by the total of step 2.
   - Step 4. Set the torque wrench to the figure arrived at in step 3.
   - Tighten the transmission fluid fill plug to the torque given by the calculation.

5. Remove the special tool.

6. Remove the container.

transmissionmanuals.com

7. *Torque:* 9 Nm

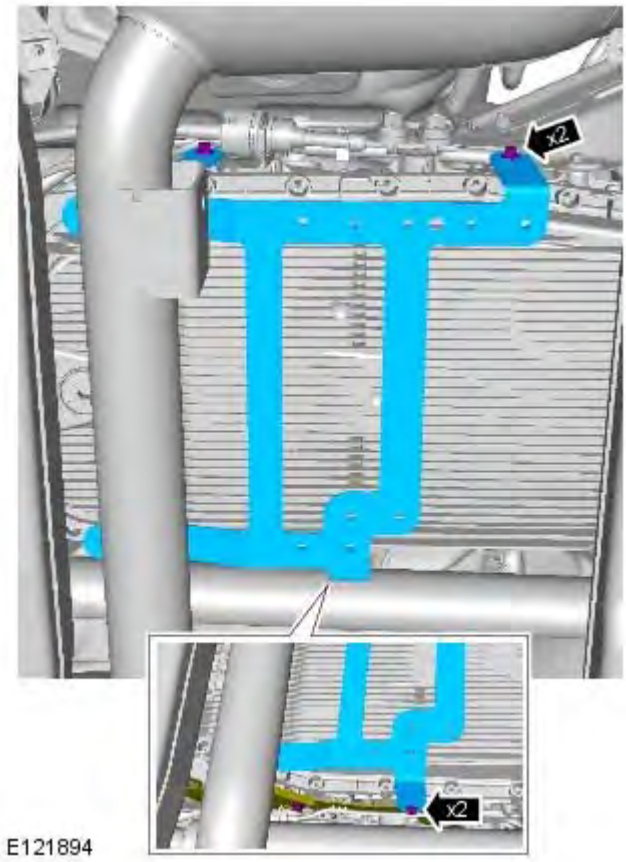

8. *Torque:* 9 Nm

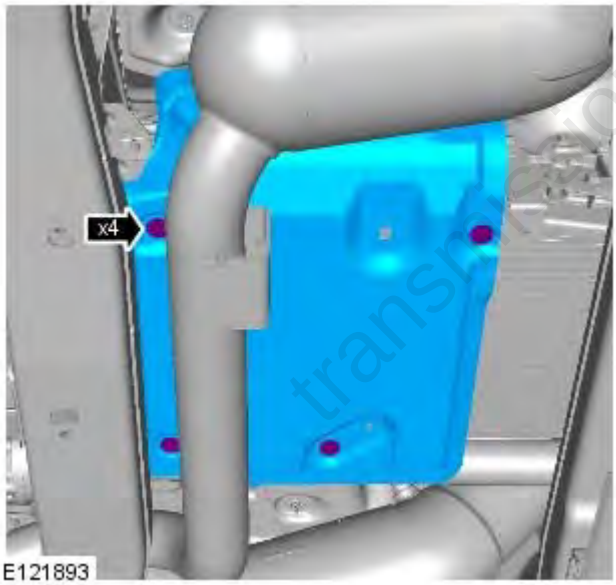

9. Lower the vehicle.

10. Disconnect the diagnostic tool from the vehicle.

transmissionmanuals.com

Published: 11-May-2011

Automatic Transmission / Transaxle - V8 5.0L Petrol / TDV6 3.0L Diesel - Transmission Fluid Drain and Refill

General Procedures

Special Tool(s)

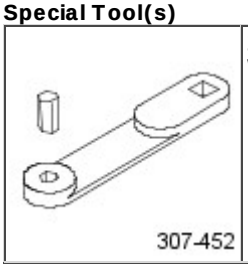	307-452 Wrench, Transmission Filler Plug

Drain

- WARNINGS:

Observe due care when draining, as the fluid can be very hot.

Observe due care when working near a hot exhaust system.

- NOTE: Some variation in the illustrations may occur, but the essential information is always correct.

1. **1.** WARNING: Make sure to support the vehicle with axle stands.

   Raise and support the vehicle.

2. *Torque:* 9 Nm

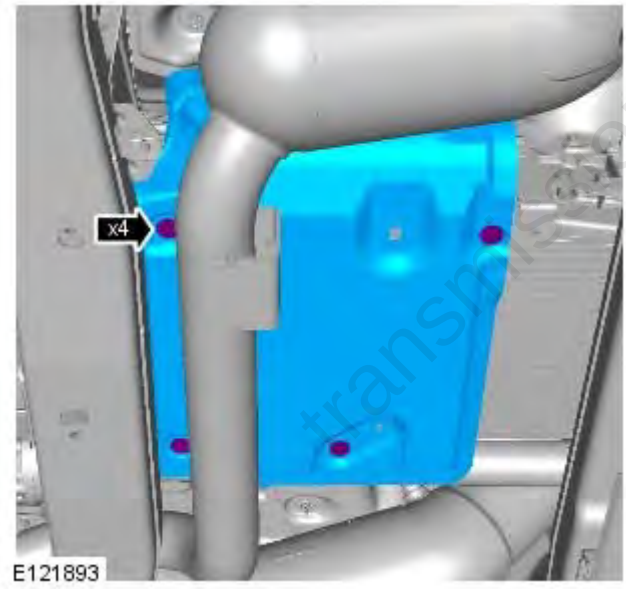

transmissionmanuals.com

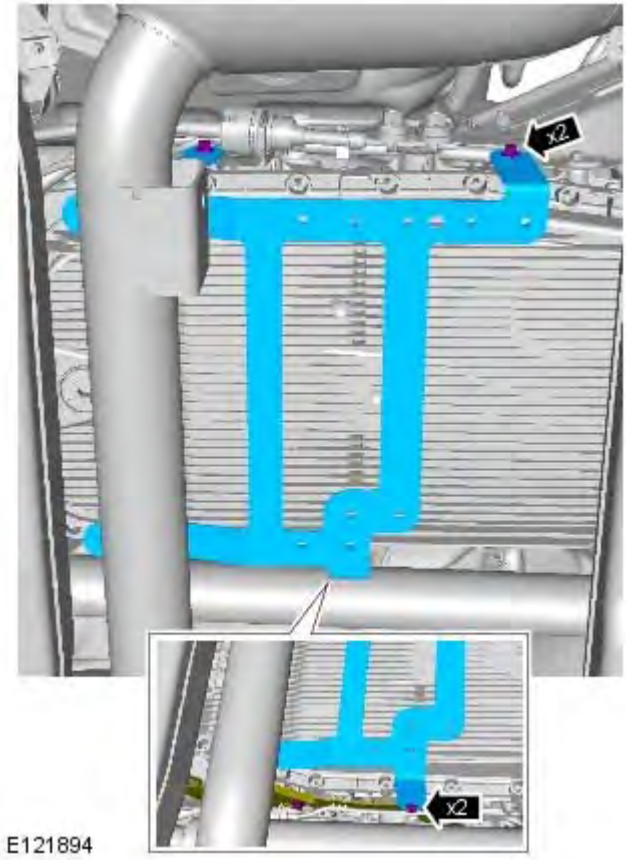

3. *Torque:* 9 Nm

4. Place a container under the transmission.

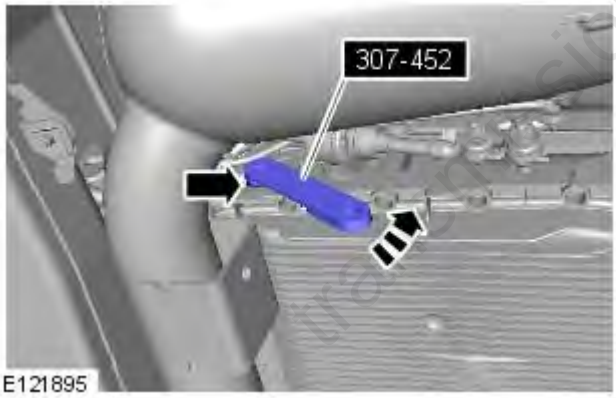

5. *Special Tool(s):* 307-452

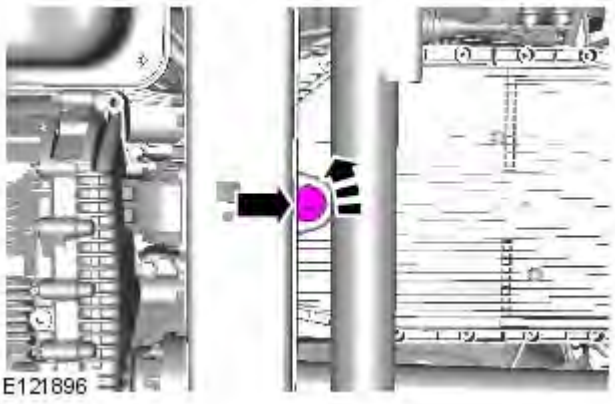

6.
- Allow the fluid to drain.
- Discard the component.

Filling

transmissionmanuals.com

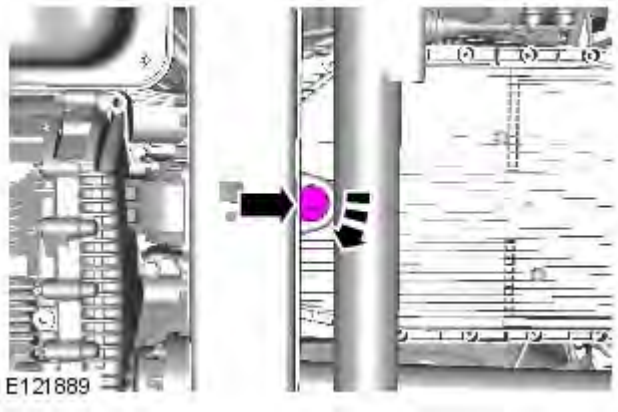

1. *Torque:* 8 Nm

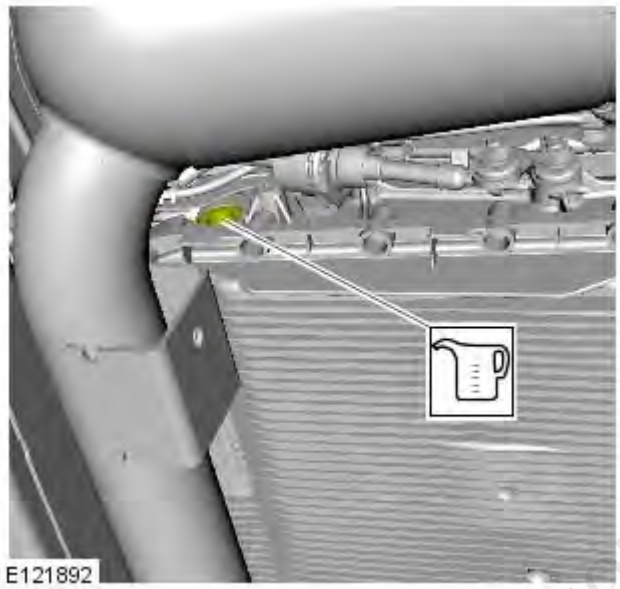

2.
- Refill the transmission with fluid.
- Use transmission fluid meeting Land Rover specification.

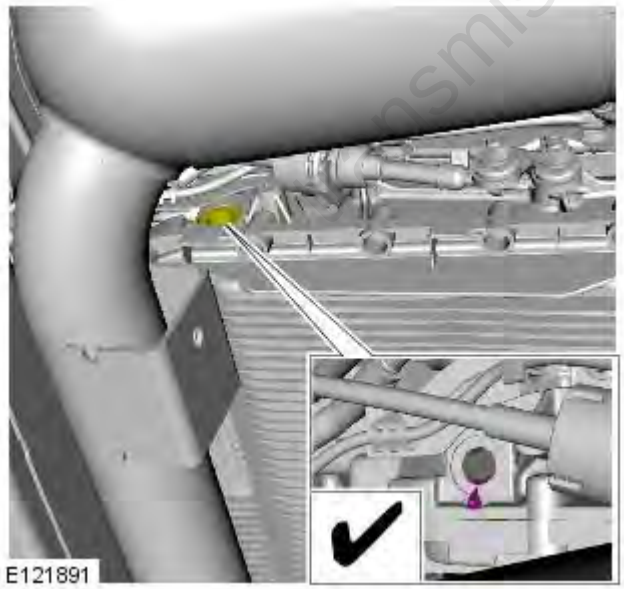

3. Allow the transmission fluid to drain from the transmission fluid filler plug hole until the flow almost stops.

transmissionmanuals.com

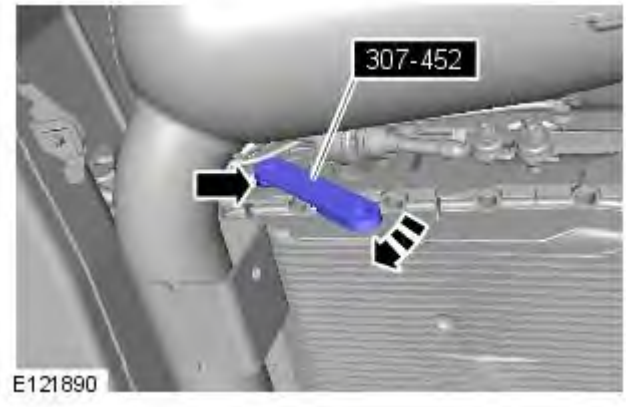

4. **4.** NOTE: Install a new sealing washer.
   - Loosely install the transmission fluid fill plug.

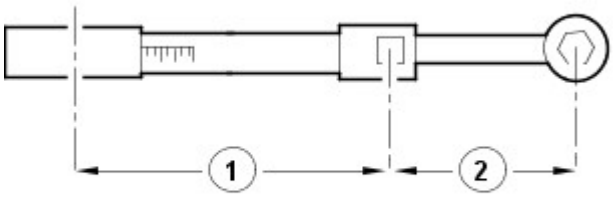

5. **5.** CAUTION: Make sure the transmission fluid fill plug is tightened to the correct specification. Failure to follow this instruction may result in damage to the vehicle.
   - To make sure the transmission fill plug is torqued to the correct specification. Using the special tool and torque wrench the following calculation steps must be followed.
   - Step 1. Multiply 35 Nm by the effective length of the torque wrench (1).
   - Step 2. Add the effective length of the special tool (2) to the effective length of the torque wrench (1).
   - Step 3. Divide the total of step 1 by the total of step 2.
   - Step 4. Set the torque wrench to the figure arrived at in step 3.
   - Tighten the transmission fluid fill plug to the torque given by the calculation.

6. Carry out a transmission fluid level check.

   Refer to: Transmission Fluid Level Check (307-01D Automatic Transmission/Transaxle - V8 5.0L Petrol/TDV6 3.0L Diesel, General Procedures).

transmissionmanuals.com

7. *Torque:* 9 Nm

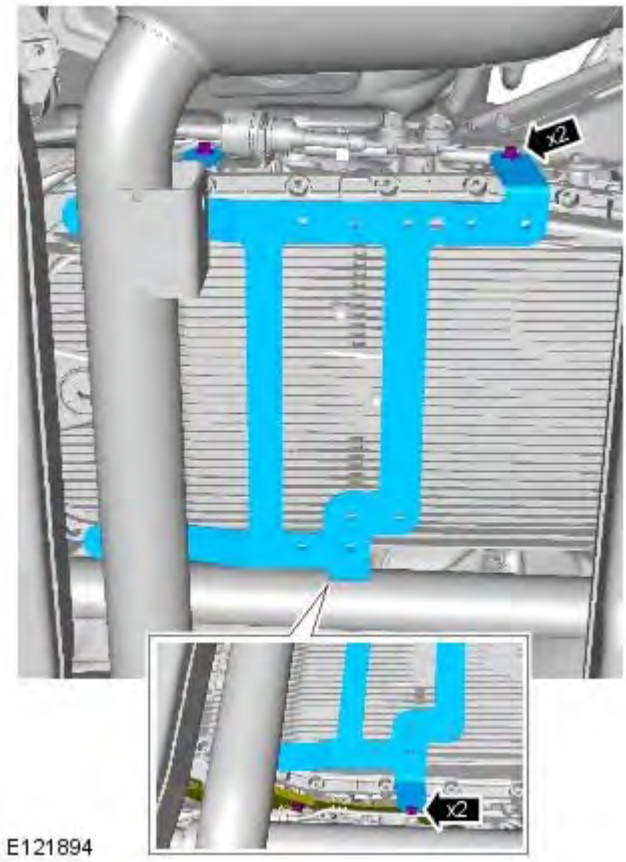

8. *Torque:* 9 Nm

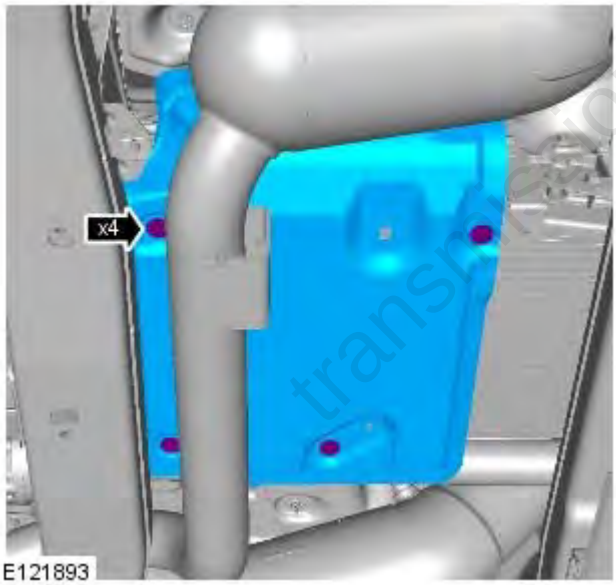

9. Lower the vehicle.

transmissionmanuals.com

Published: 11-May-2011

Automatic Transmission / Transaxle - V8 5.0L Petrol / TDV6 3.0L Diesel - Input Shaft Seal

Removal and Installation

Special Tool(s)

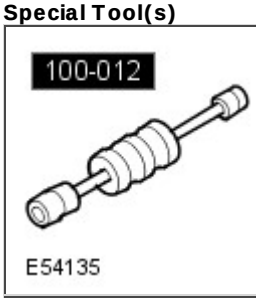	100-012 Slide Hammer
	100-012-01 Slide Hammer Adaptor
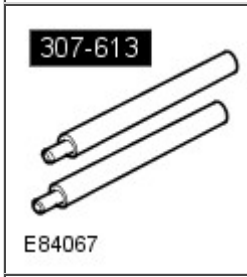	307-613 Holding Pins, Torque Converter
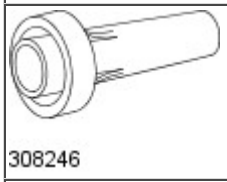	308-246 Front Seal Installer
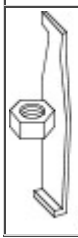	308-375 Seal Remover Input and Output

Removal

1. **1.** WARNING: Make sure to support the vehicle with axle stands.

   Raise and support the vehicle.

2. Refer to: Transmission - TDV6 3.0L Diesel (307-01D Automatic Transmission/Transaxle - V8 5.0L Petrol/TDV6 3.0L Diesel, Removal).
   Refer to: Transmission - V8 5.0L Petrol (307-01D Automatic Transmission/Transaxle - V8 5.0L Petrol/TDV6 3.0L Diesel, Removal).

transmissionmanuals.com

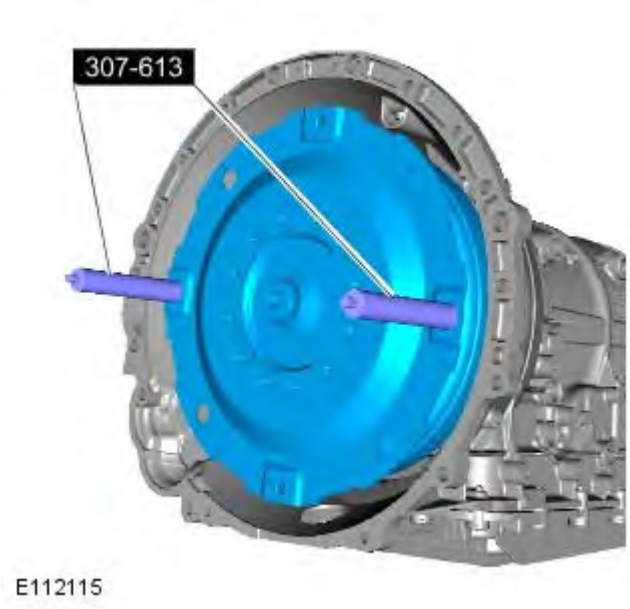

3. *Special Tool(s):* 307-613

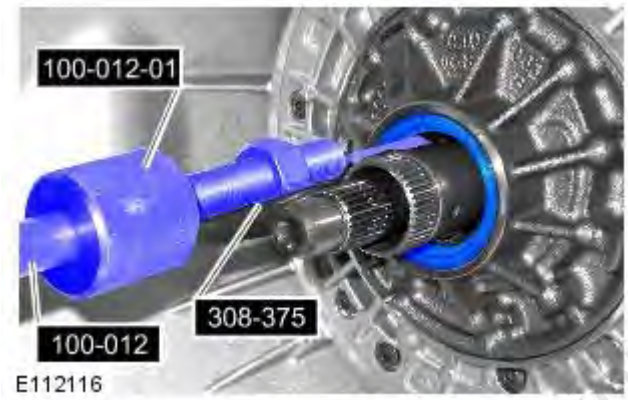

4. **4.** CAUTIONS:

   Take extra care not to damage the edges of the component.

   Discard the seal.

   Special Tool(s): 100-012, 100-012-01, 308-375

Installation



1. **1.** CAUTION: Install a new seal.

   Special Tool(s): 308-246

transmissionmanuals.com

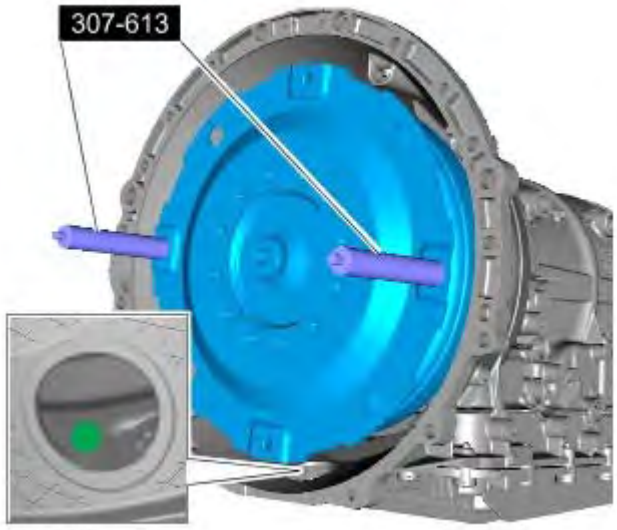

E112118

2. **2.** NOTE: Make sure that the alignment mark is visable through the inspection hole as illustrated.

   Special Tool(s): 307-613


E118200

3. **3.** CAUTION: Make sure the torque converter is fully located into the oil pump drive.

4. Refer to: Transmission - V8 5.0L Petrol (307-01D Automatic Transmission/Transaxle - V8 5.0L Petrol/TDV6 3.0L Diesel, Installation).
   Refer to: Transmission - TDV6 3.0L Diesel (307-01D Automatic Transmission/Transaxle - V8 5.0L Petrol/TDV6 3.0L Diesel, Installation).

transmissionmanuals.com

Published: 11-May-2011

Automatic Transmission / Transaxle - V8 5.0L Petrol / TDV6 3.0L Diesel - Extension Housing Seal

Removal and Installation

Special Tool(s)

	303-903 Remover, Input Shaft Seal
	307-520 Installer, Output Shaft Seal

Removal

1. **1.** WARNING: Make sure to support the vehicle with axle stands.

   Raise and support the vehicle.

2. Remove the transfer case.

   Refer to: Transfer Case - V8 5.0L Petrol (308-07B Transfer Case, Removal).
   Refer to: Transfer Case - TDV6 3.0L Diesel (308-07B Transfer Case, Removal).

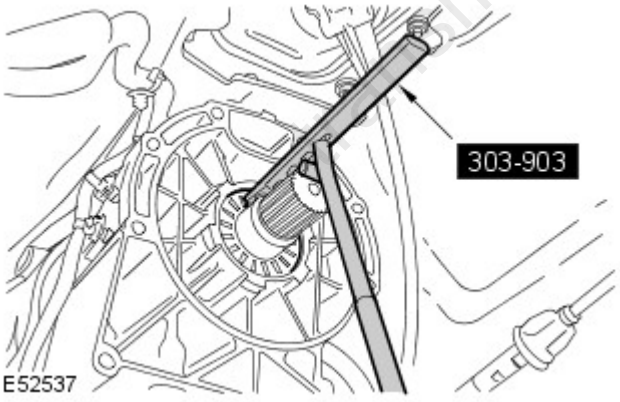

3. **3.** CAUTION: Care must be taken to avoid damage to the seal register and running surface.

   - Remove the transmission output shaft oil seal.
   - Use the special tool.
   - *Special Tool(s):* 303-903

Installation

transmissionmanuals.com

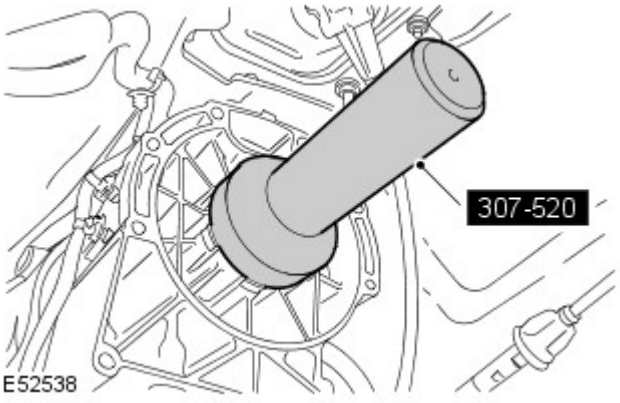

1. **1.** CAUTIONS:

   Oil seals must be fitted dry.

   Make sure that the mating faces are clean and free of foreign material.

   - Install a new transmission output shaft oil seal.
   - Clean the seal register.
   - Use the special tool.
   - *Special Tool(s):* 307-520

2. Install the transfer case.

   Refer to: Transfer Case - V8 5.0L Petrol (308-07B Transfer Case, Removal).
   Refer to: Transfer Case - TDV6 3.0L Diesel (308-07B Transfer Case, Removal).

3. Check and top-up the transmission fluid level.

   Refer to: Transmission Fluid Level Check (307-01D Automatic Transmission/Transaxle - V8 5.0L Petrol/TDV6 3.0L Diesel, General Procedures).

transmissionmanuals.com

Published: 11-May-2011

Automatic Transmission / Transaxle - V8 5.0L Petrol / TDV6 3.0L Diesel - Transmission Control Module (TCM) and Main Control Valve Body

Removal and Installation

Removal

- NOTE: The transmission control module (TCM) is part of the main control valve body and cannot be serviced separately.

1. **1.** WARNING: Make sure to support the vehicle with axle stands.

   Raise and support the vehicle.

2. Refer to: Transmission Fluid Pan, Gasket and Filter (307-01D Automatic Transmission/Transaxle - V8 5.0L Petrol/TDV6 3.0L Diesel, Removal and Installation).

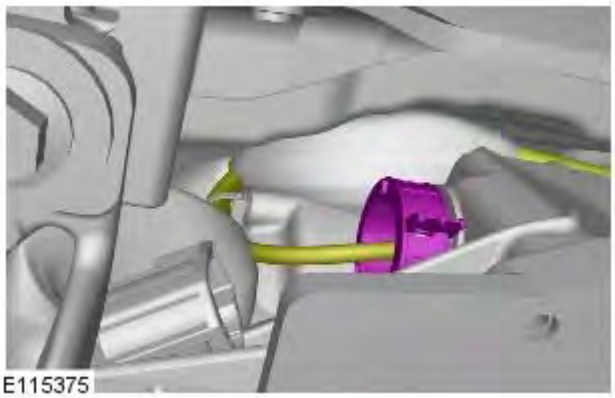

3.

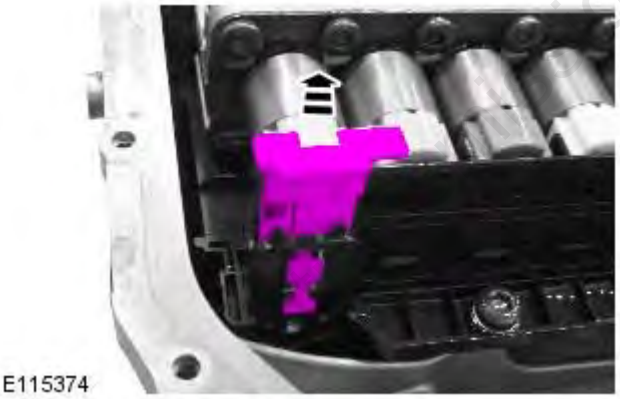

4.



5. **5.** CAUTION: Discard the component.

manualsonmanuals.com

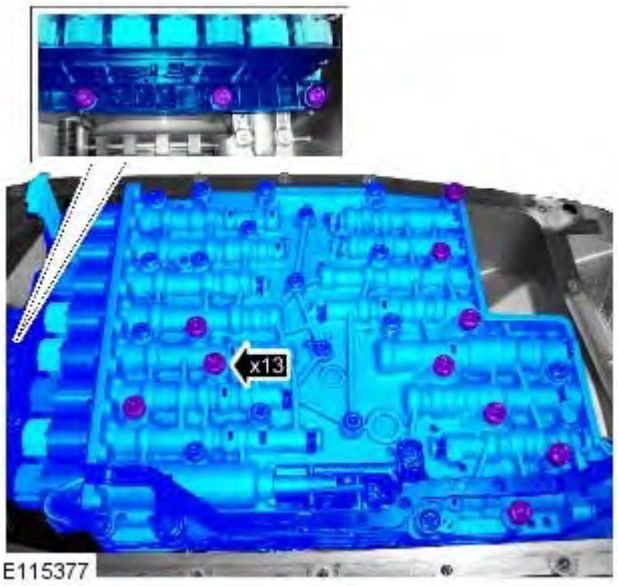

6. **6.** CAUTION: Be prepared to collect escaping fluids.

   • NOTE: Note the position of the manual park brake release.



7.



8.

Installation

transmissionmanuals.com



1. **1.** CAUTIONS:

   Make sure that when fully fitted, all seals protrude by the same amount.

   Install the new seals.

   - Install a new seal block.



2. **2.** CAUTIONS:

   Install the new seals.

   Make sure that when fully fitted, all seals protrude by the same amount.



3. **3.** CAUTION: Make sure the manual park release is correctly engaged.

   Torque: 8 Nm

transmissionmanuals.com


E115381

4. **4.** CAUTION: Make sure that a new component is installed.

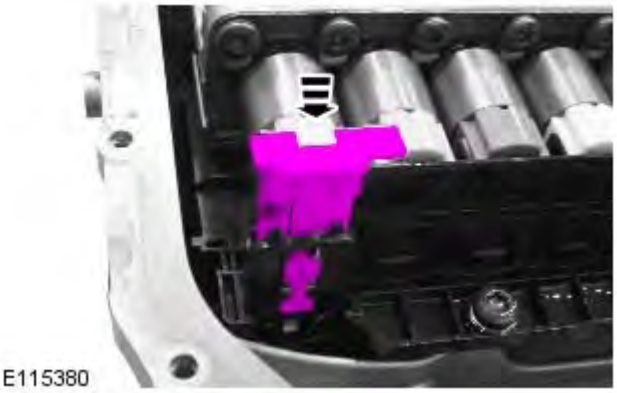
E115380

5.

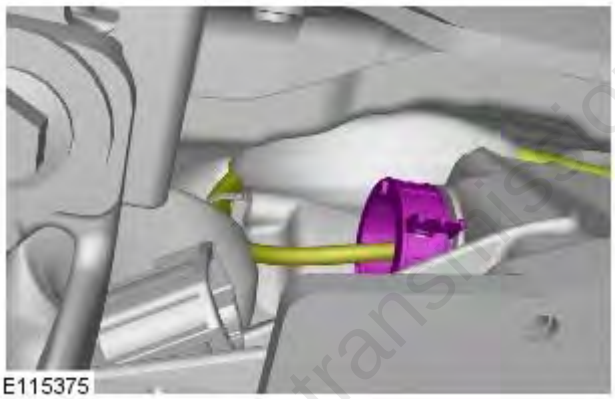
E115375

6.

7. Refer to: Transmission Fluid Pan, Gasket and Filter (307-01D Automatic Transmission/Transaxle - V8 5.0L Petrol/TDV6 3.0L Diesel, Removal and Installation).

8. If a new component has been installed, configure using Jaguar approved diagnostic equipment.

transmissionmanuals.com

Published: 06-Dec-2011

Automatic Transmission / Transaxle - V8 5.0L Petrol / TDV6 3.0L Diesel - Transmission Fluid Pan, Gasket and Filter

Removal and Installation

Removal

- NOTE: Removal steps in this procedure may contain installation details.

1. **1.** WARNING: Make sure to support the vehicle with axle stands.

   Raise and support the vehicle.

2. Refer to: Transmission Fluid Drain and Refill (307-01D Automatic Transmission/Transaxle - V8 5.0L Petrol/TDV6 3.0L Diesel, General Procedures).

3. Refer to: Transmission Support Crossmember - V8 5.0L Petrol (502-02 Full Frame and Body Mounting, Removal and Installation).

4.



5.

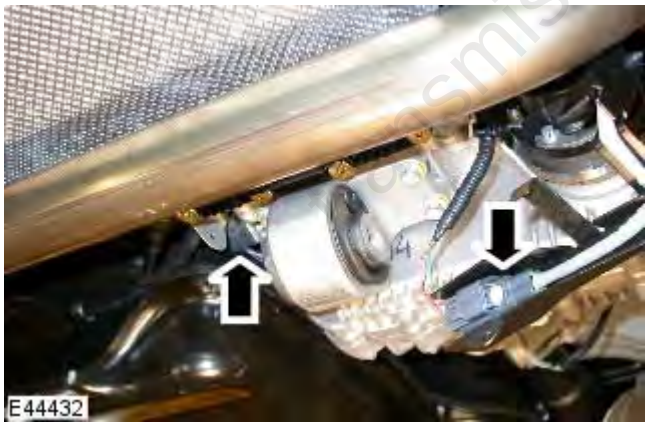

6.

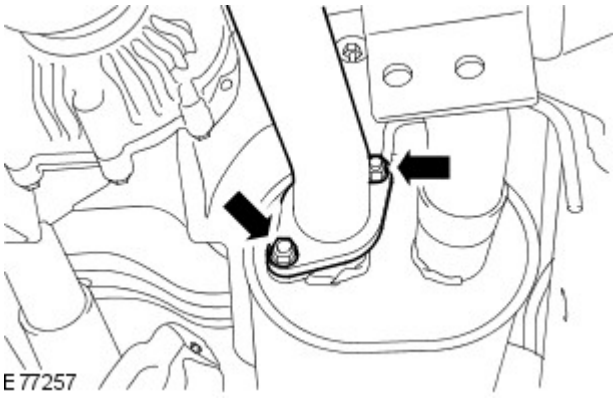

transmissionmanuals.com

7. **7.** NOTE: Install a new gasket.

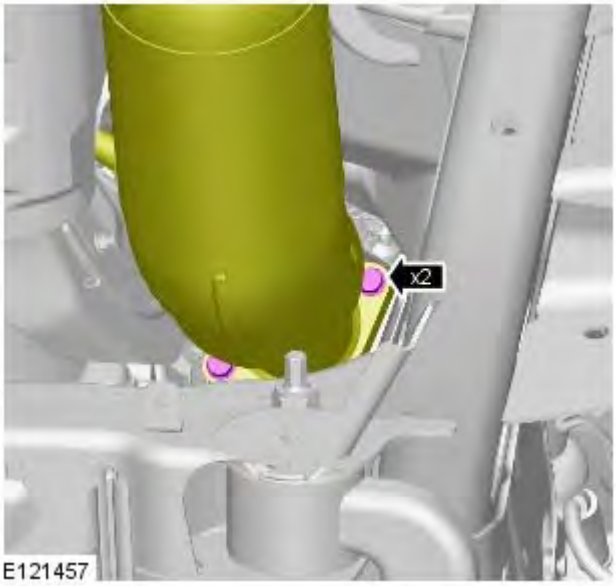

E121457

8.

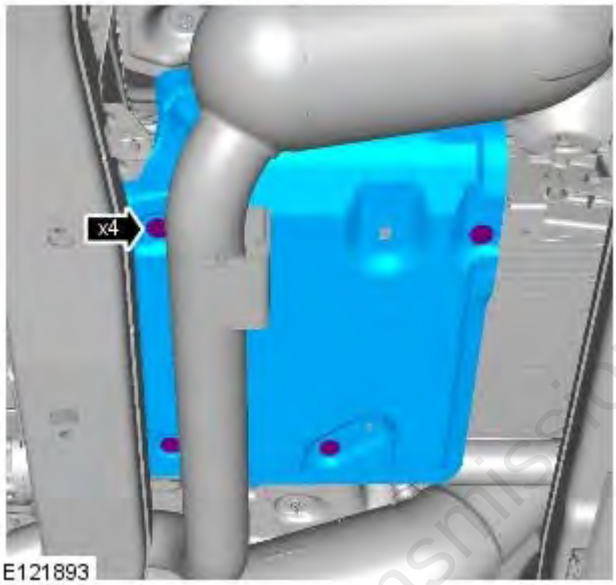

E121893

9.

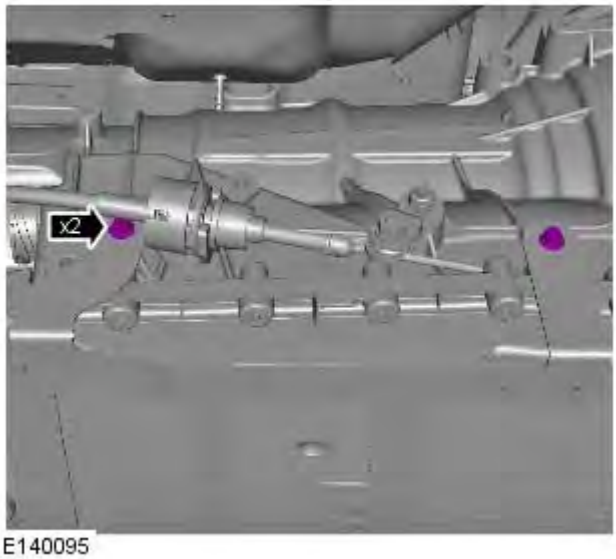

E140095

transmissionmanuals.com

10.

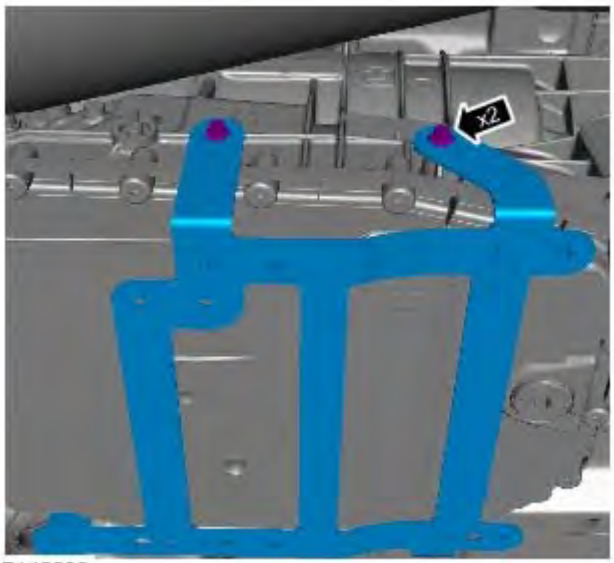

E140096

11. **11.** CAUTION: Be prepared to collect escaping fluids.

• NOTE: The component cannot be removed at this stage.

Detach the transmission fluid pan from the transmission.

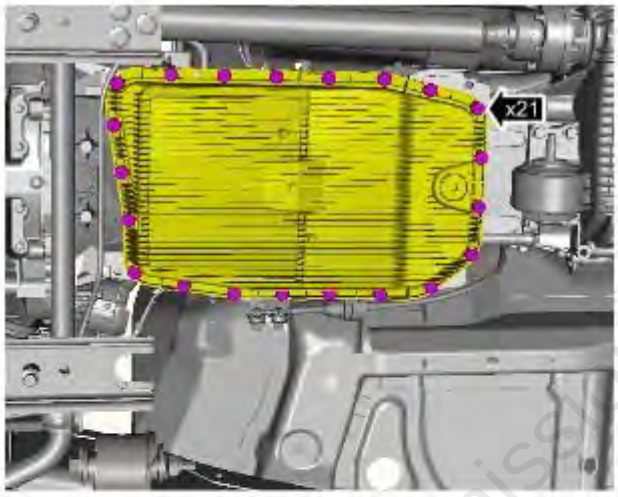

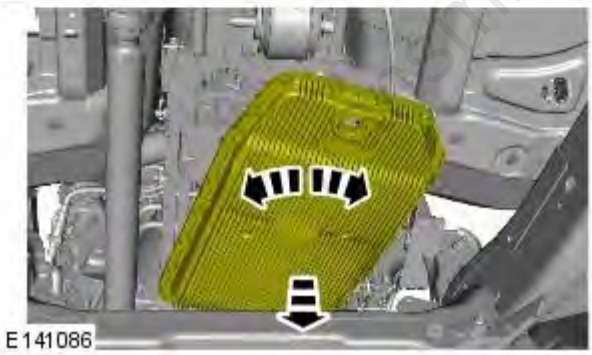
E141086

nissanmanuals.com

12.

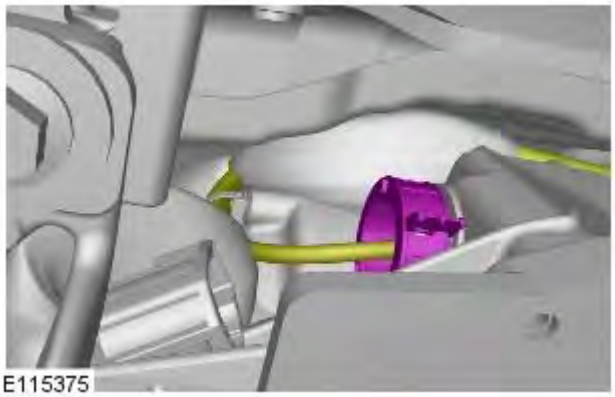
E115375

13.

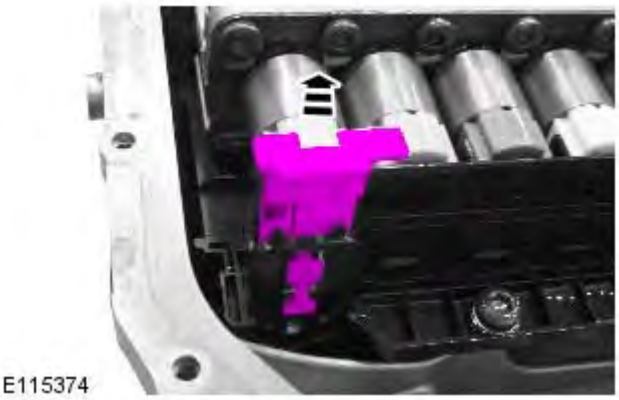
E115374


E115376

14. **14.** CAUTION: Discard the component.

transmissionmanuals.com

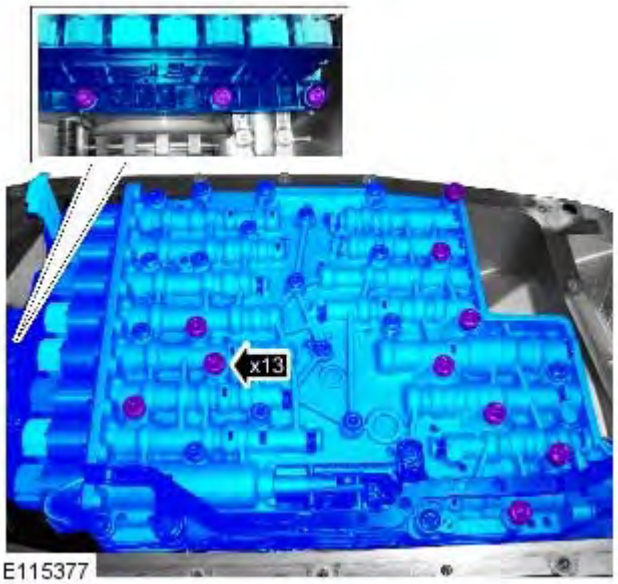

15. **15.** CAUTION: Be prepared to collect escaping fluids.

    • NOTE: Note the position of the manual park brake release.

    • NOTE: Transmission fluid pan shown removed for clarity.

    Remove the transmission control module and the transmission fluid pan.



16.



17.

18. Remove the transmission fluid pan and the transmission control module.

19. Remove and discard the gasket.

Installation

transmissionmanuals.com



1. **1.** CAUTIONS:

   Make sure that when fully fitted, all seals protrude by the same amount.

   Install the new seals.

   - Install a new seal block.



2. **2.** CAUTIONS:

   Install the new seals.

   Make sure that when fully fitted, all seals protrude by the same amount.

3. Install the new gasket.

4. Install the transmission fluid pan and the transmission control module.



5. **5.** CAUTION: Make sure the manual park release is correctly engaged.

   • NOTE: Transmission fluid pan shown removed for clarity.

   Tighten to 8 Nm.

transmissionmanuals.com



6. **6.** CAUTION: Make sure that a new component is installed.

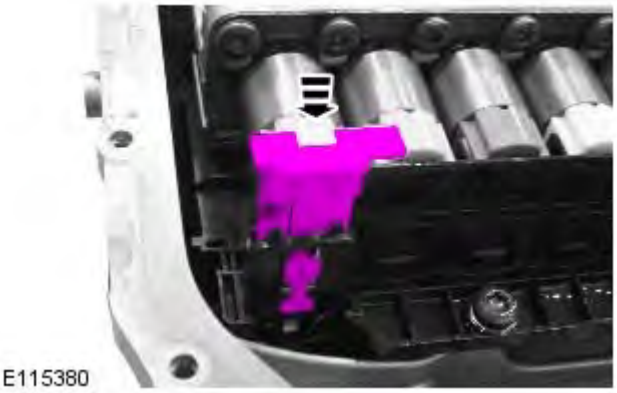

7.

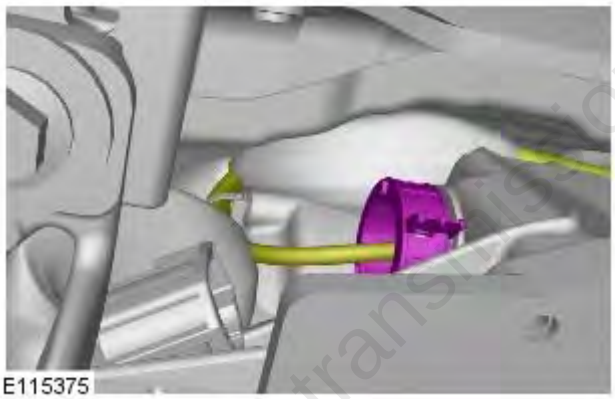

8.

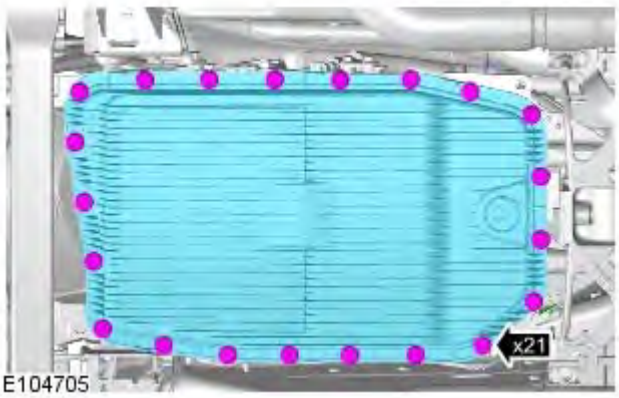

9. Tighten to 8 Nm.

transmissionmanuals.com

10.

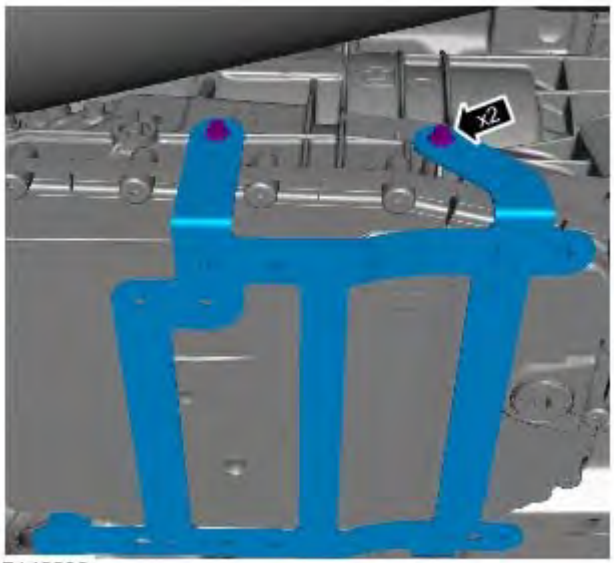

E140096

11.

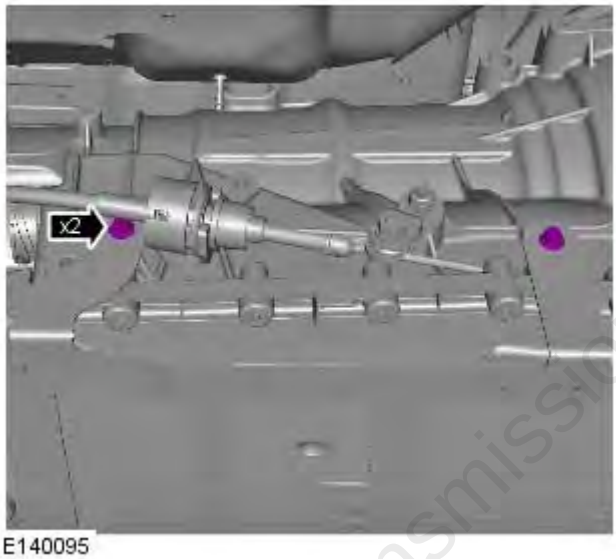

E140095

12.

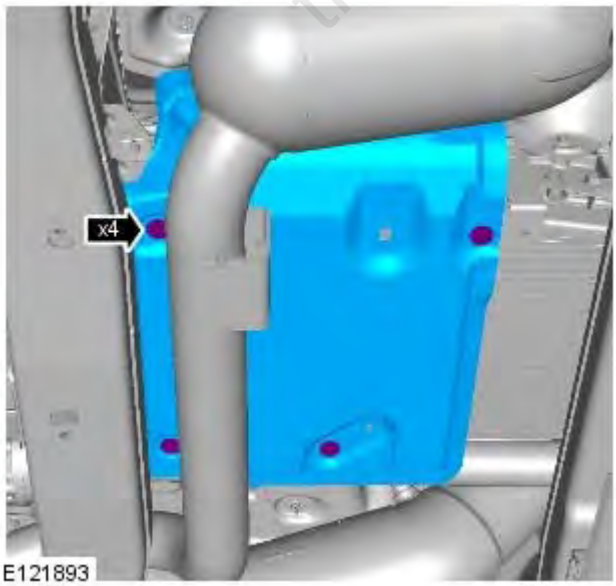

E121893

transmissionmanuals.com

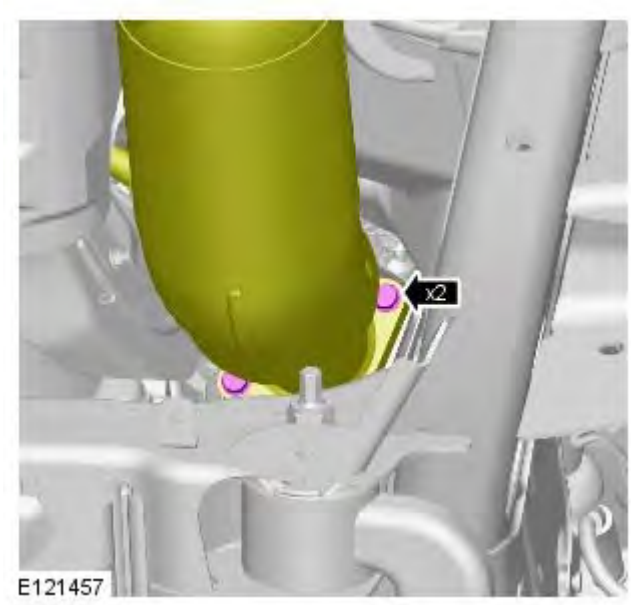

13. **13.** NOTE: Install a new gasket.

    Tighten to 22 Nm.

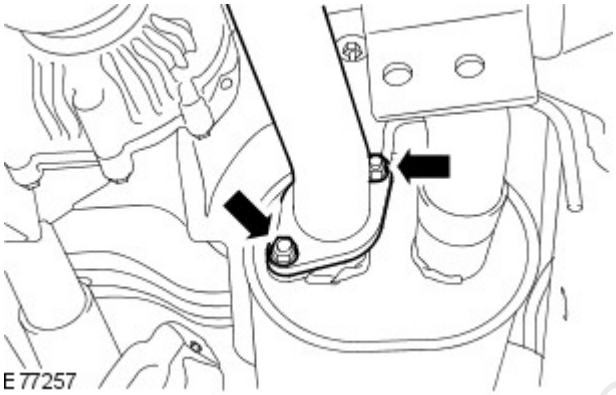

14. Tighten to 22 Nm.

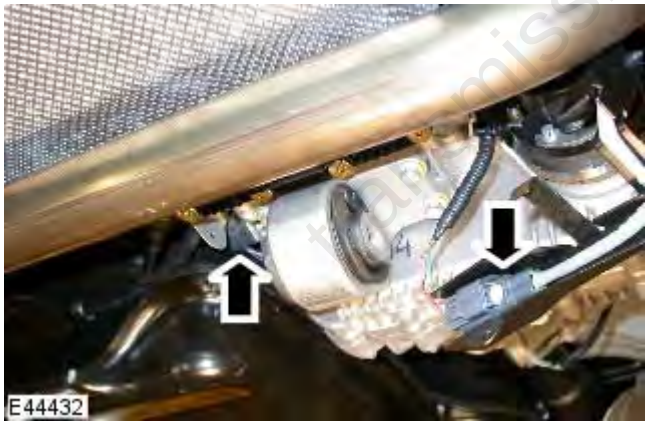

15.



16.

17. Refer to: Transmission Support Crossmember - V8 5.0L Petrol (502-02 Full Frame and Body Mounting, Removal and Installation).

18. Refer to: Transmission Fluid Drain and Refill (307-01D Automatic Transmission/Transaxle - V8 5.0L Petrol/TDV6 3.0L Diesel, General Procedures).

19. Lower the vehicle.

transmissionmanuals.com

Published: 11-May-2011

Automatic Transmission / Transaxle - V8 5.0L Petrol / TDV6 3.0L Diesel - Transmission Support Insulator

Removal and Installation

Removal

1. WARNING: Make sure to support the vehicle with axle stands.

Raise and support the vehicle.

2. Remove the transmission crossmember.
For additional information, refer to: Transmission Support Crossmember - V8 5.0L Petrol (502-02 Full Frame and Body Mounting, Removal and Installation) / Transmission Support Crossmember - TDV6 3.0L Diesel (502-02 Full Frame and Body Mounting, Removal and Installation).

3. Remove the transmission support insulator.

- Remove the 4 bolts.

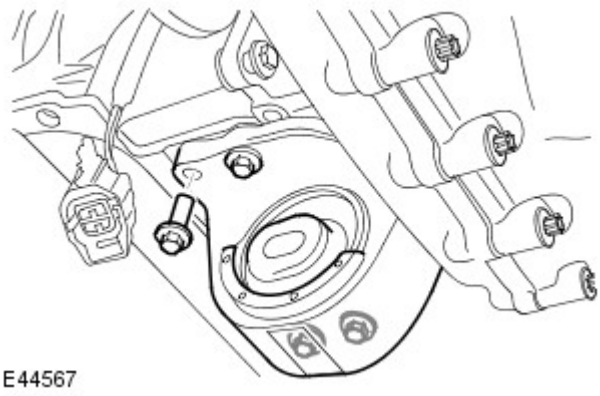

E44567

Installation

1. To install, reverse the removal procedure.

- Clean the component mating faces.
- Tighten the bolts to 60 Nm (44 lb.ft).

transmissionmanuals.com

Published: 11-May-2011

Automatic Transmission / Transaxle - V8 5.0L Petrol / TDV6 3.0L Diesel - TransmissionV8 5.0L Petrol

Removal

- NOTE: Some variation in the illustrations may occur, but the essential information is always correct.
- NOTE: Some illustrations may show the transmission removed for clarity.
- NOTE: Some illustrations may show the engine removed for clarity.

1. Remove the battery.

   Refer to: Battery (414-01 Battery, Mounting and Cables, Removal and Installation).

2. **2.** WARNING: Make sure to support the vehicle with axle stands.

   Raise and support the vehicle.

3. Refer to: Rear Driveshaft (205-01 Driveshaft, Removal and Installation).

4. Refer to: Exhaust System (309-00D Exhaust System - V8 5.0L Petrol, Removal and Installation).

5. Refer to: Front Driveshaft - V8 5.0L Petrol (205-01 Driveshaft, Removal and Installation).

6. Refer to: Axle Assembly (205-03 Front Drive Axle/Differential, Removal and Installation).

7.

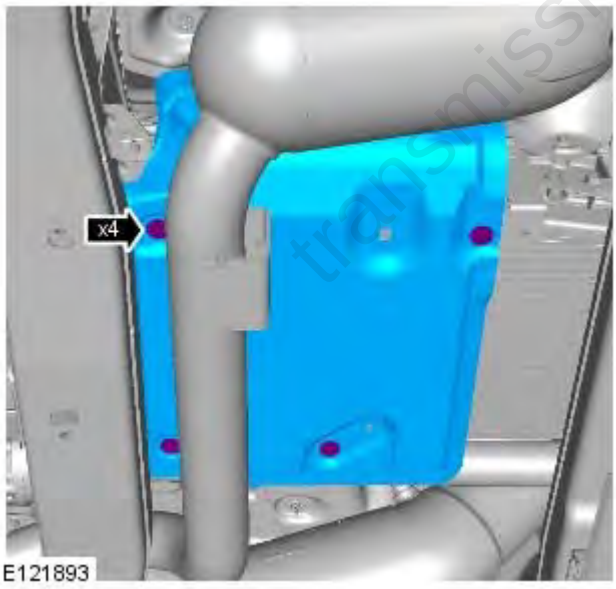

transmissionmanuals.com

8.

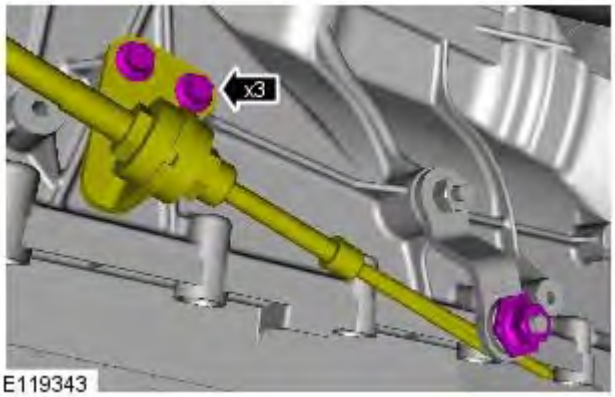

E119343

9.

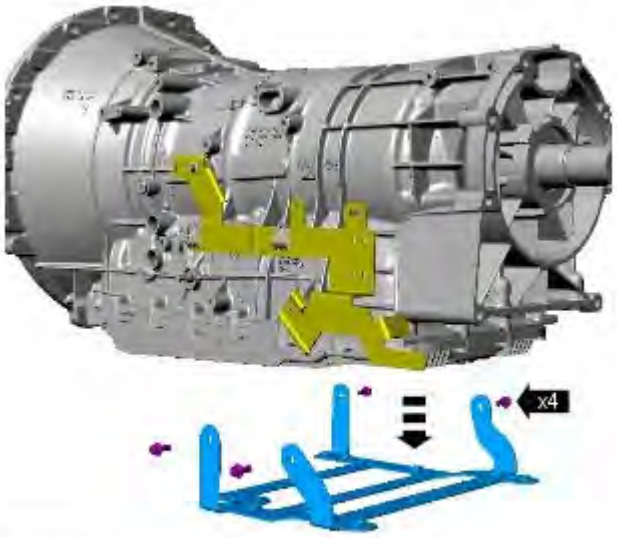

E123334

10.



E121680

transmissionmanuals.com

11.

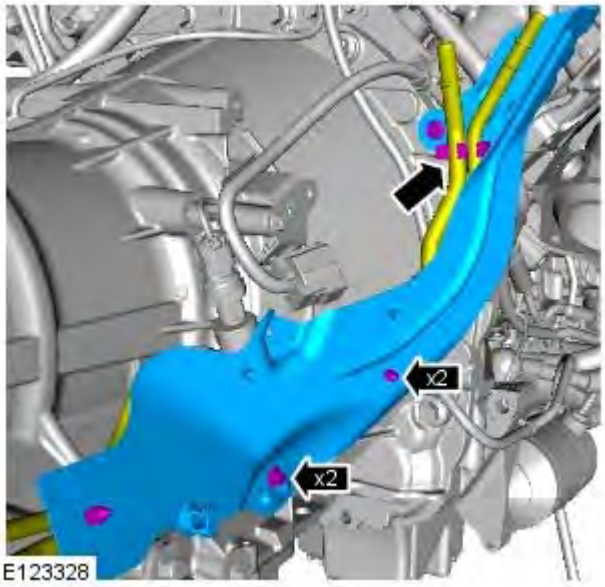

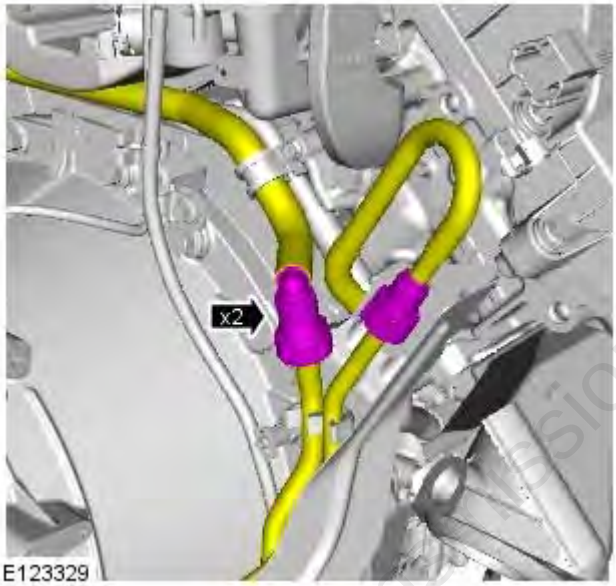

12. **12.** WARNING: Do not smoke or carry lighted tobacco or open flame of any type when working on or near any fuel related components. Highly flammable vapors are always present and may ignite. Failure to follow these instructions may result in personal injury.

CAUTION: Be prepared to collect escaping fluids.

13.

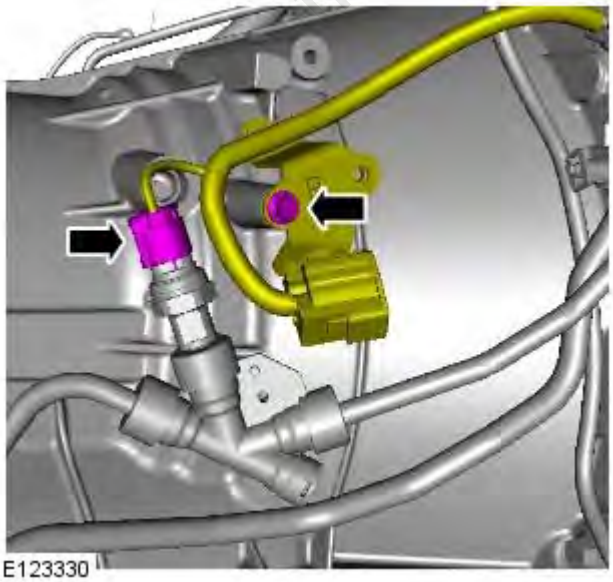

14.

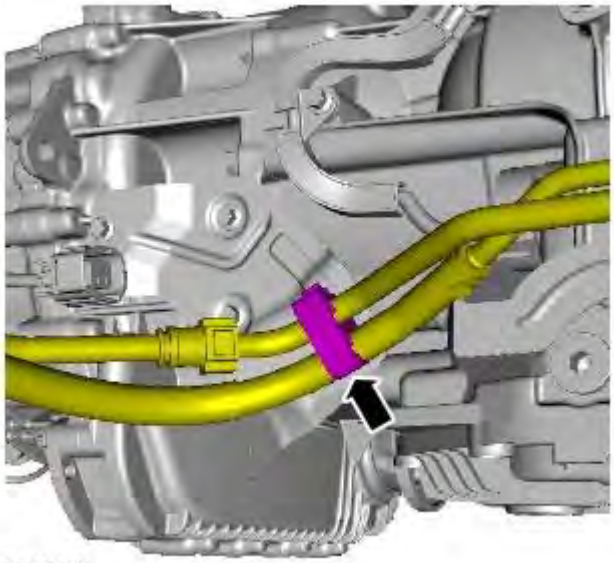

E123332

15.

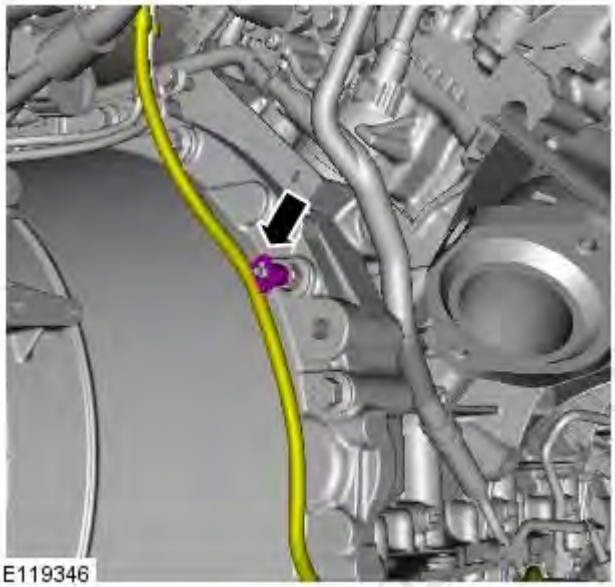

E119346

16.

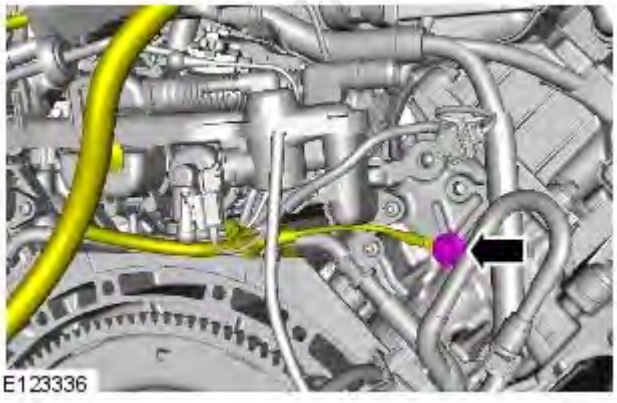

E123336

transmissionmanuals.com

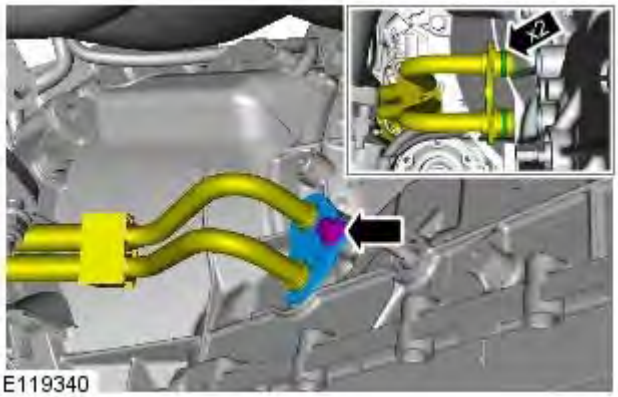

17. **17.** WARNING: Be prepared to collect escaping fluids.

CAUTION: Make sure that all openings are sealed. Use new blanking caps.

- Remove and discard the 2 O-ring seals.

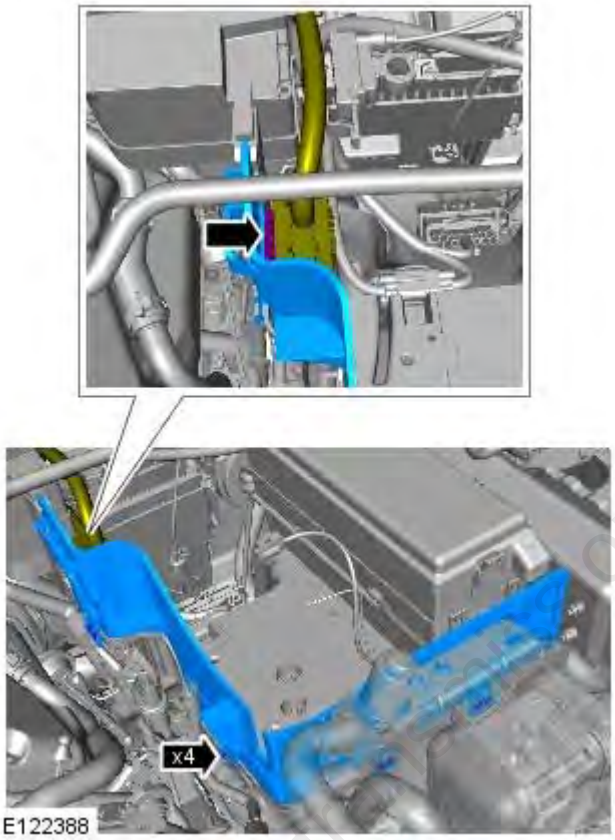

18. **18.** NOTE: RHD illustration shown, LHD is similar.

thesisrepublishmanuals.com

19.

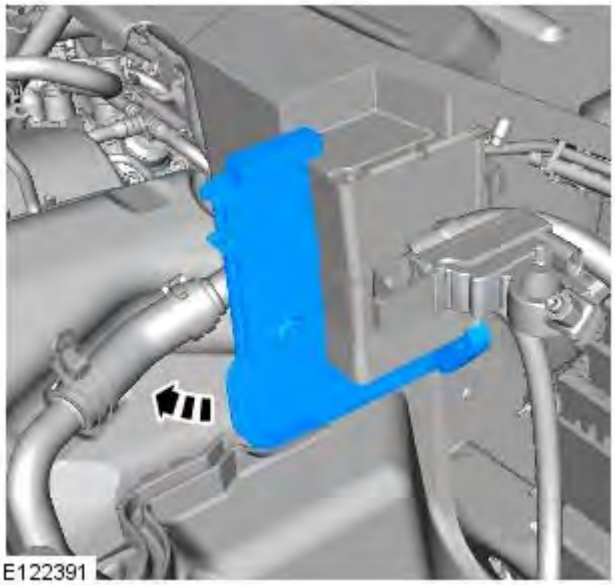

20.

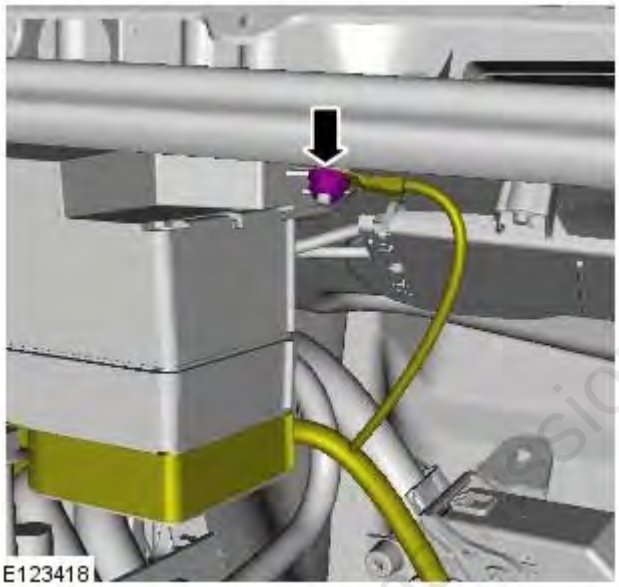

21.

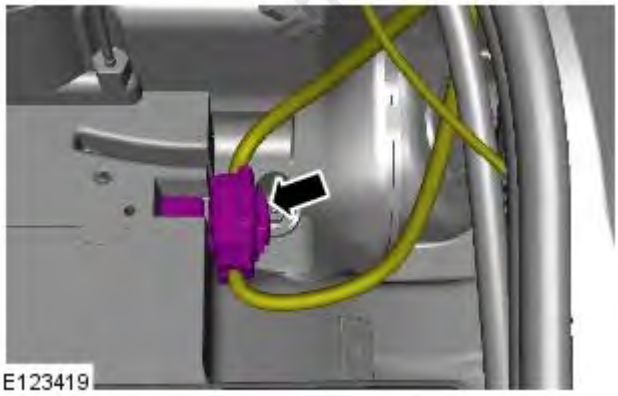

transmissionmanuals.com

22.

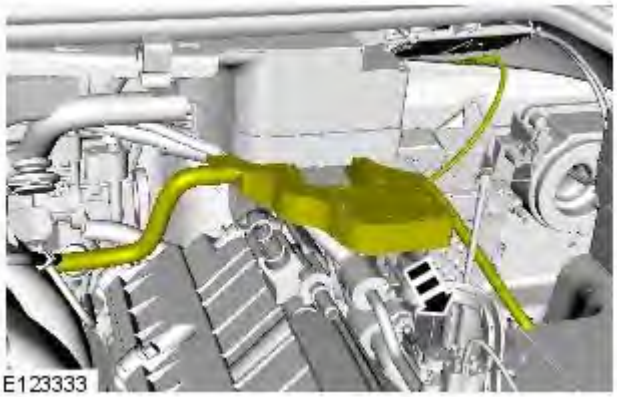

23.

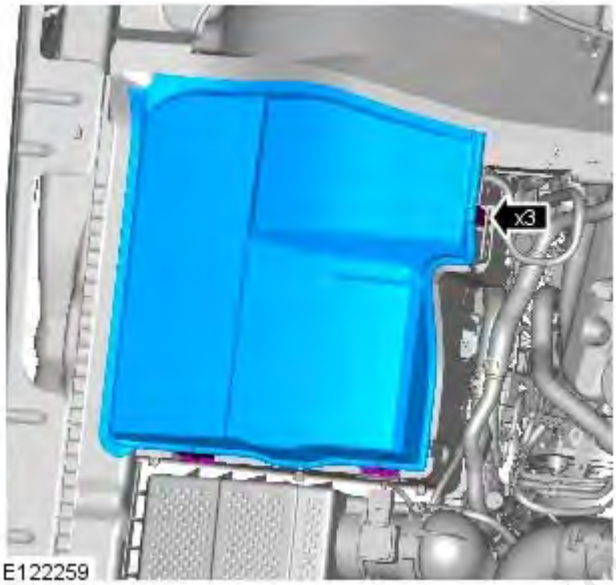

24.

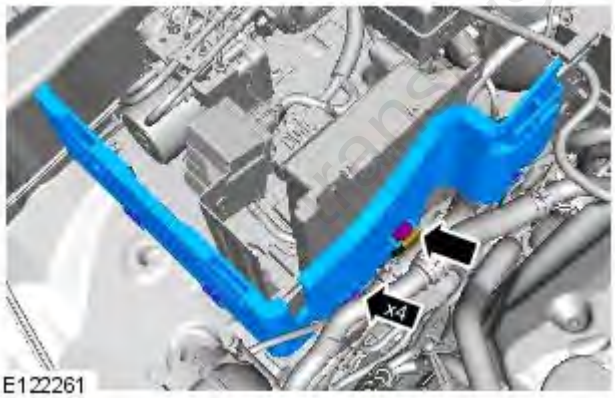

transmissionmanuals.com

25.

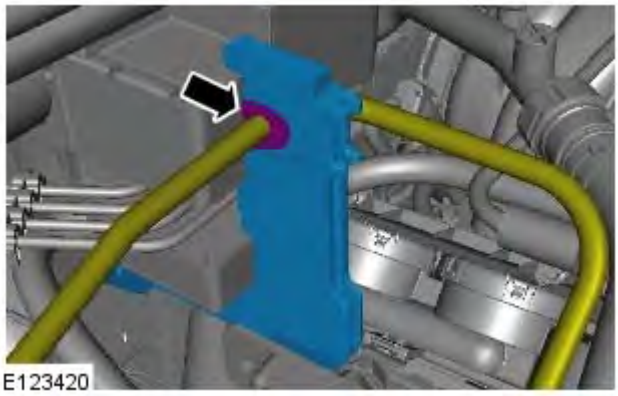

26.

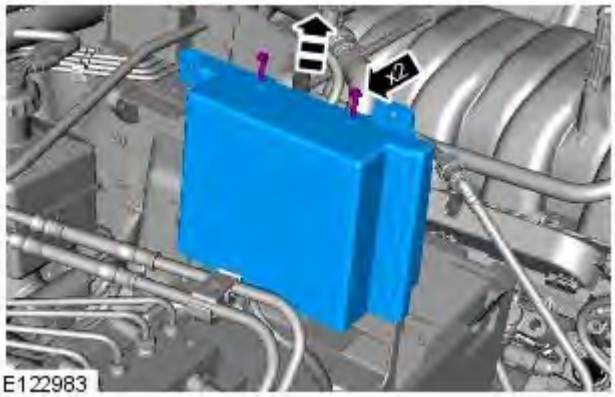

27.

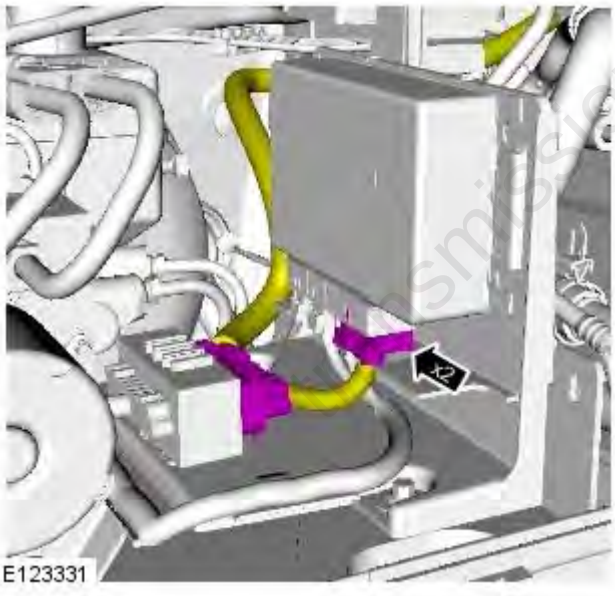

transmissionmanuals.com

28.

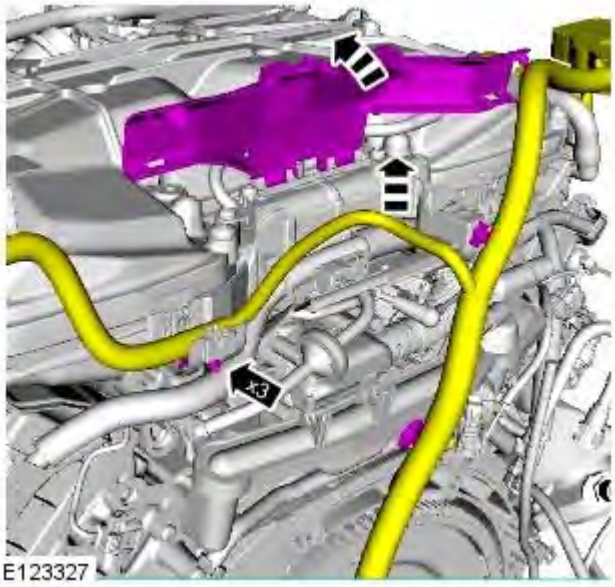

29.



30. **30.** CAUTION: Only rotate the crankshaft clockwise.

- Make sure that the alignment mark is visable through the inspection hole on removal of the last torque converter bolt.

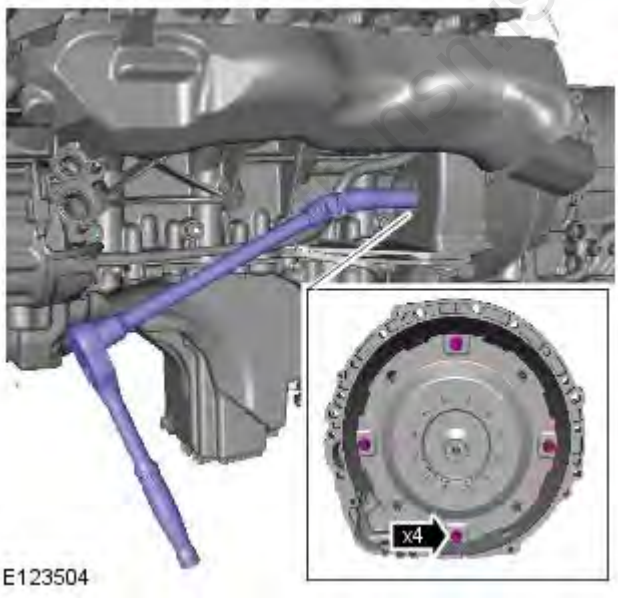

transmissionmanuals.com

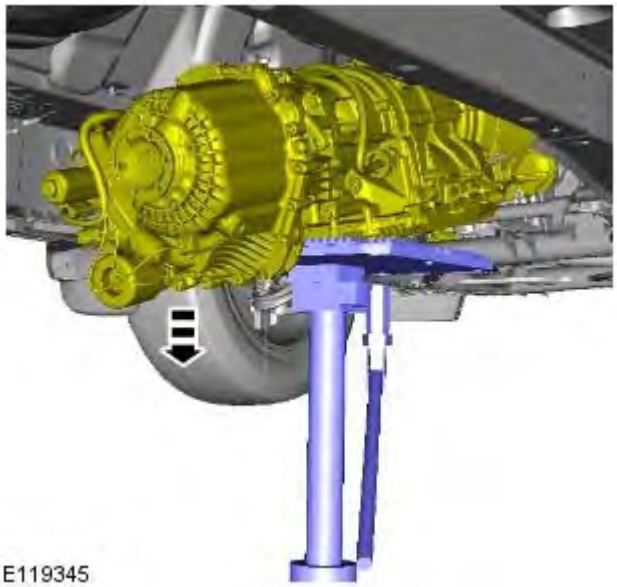
E119345

31. **31.** WARNING: Make sure that the transmission is secured with suitable retaining straps.

    Lower the rear of the transmission for access.

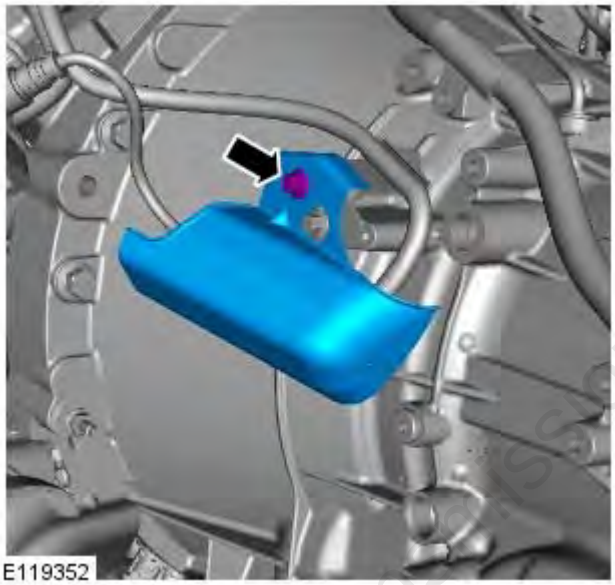
E119352

32.

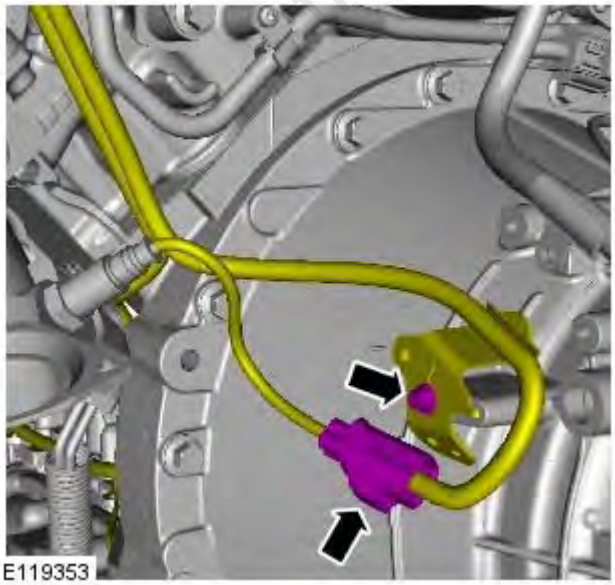
E119353

33.

transmissionmanuals.com

34.





35. **35.** CAUTION: Make sure that the torque converter remains in the transmission.

• NOTE: This step requires the aid of another technician.

- Using a suitable hydraulic jack, support the transmission.
- Do not disassemble further if removed for access only
- Install the torque converter retainer.

transmissionmanuals.com

Published: 09-Aug-2011

Automatic Transmission / Transaxle - V8 5.0L Petrol / TDV6 3.0L Diesel - TransmissionTDV6 3.0L Diesel

Removal

Special Tool(s)

 E53727	303-1069 Adaptor, Wrench

- NOTE: Some variation in the illustrations may occur, but the essential information is always correct.
- NOTE: Some illustrations may show the transmission removed for clarity.
- NOTE: Some illustrations may show the engine removed for clarity.

1.
- Disconnect the battery ground cable.
- Refer to: Specifications (414-00, Specifications).

2. **2.** WARNING: Make sure to support the vehicle with axle stands.

Raise and support the vehicle.

3.

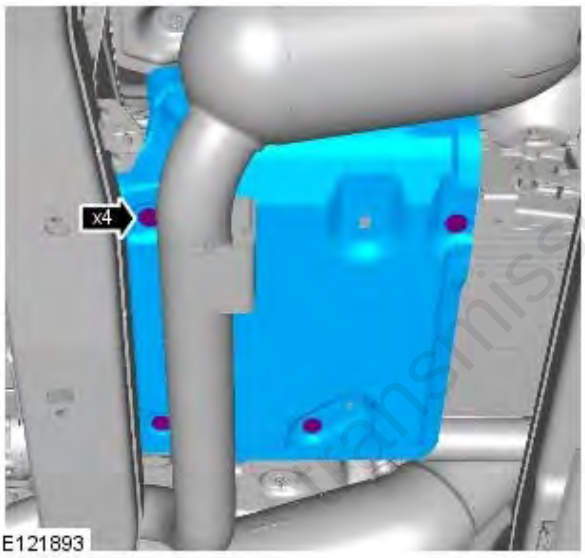

transmissionmanuals.com

4.

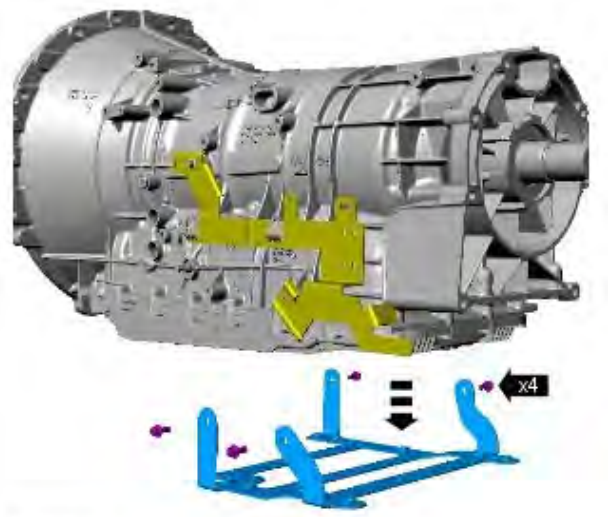

E123334

5. Refer to: Catalytic Converter (309-00B Exhaust System - TDV6 3.0L Diesel, Removal and Installation).

6. Refer to: Rear Driveshaft (205-01 Driveshaft, Removal and Installation).

7.

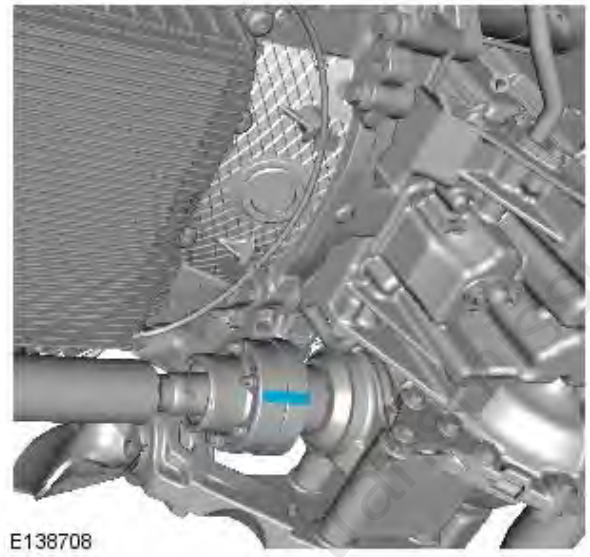

E138708

8. **8.** CAUTION: Discard the bolts.

   Using a suitable tie strap, secure the driveshaft.

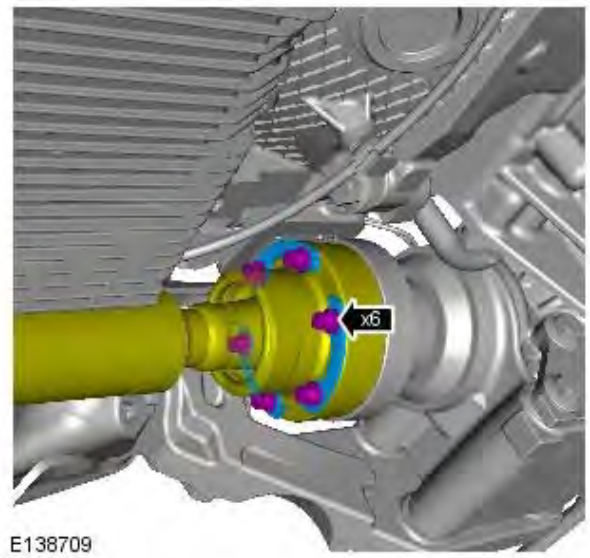

E138709

carservicemanuals.com

9.

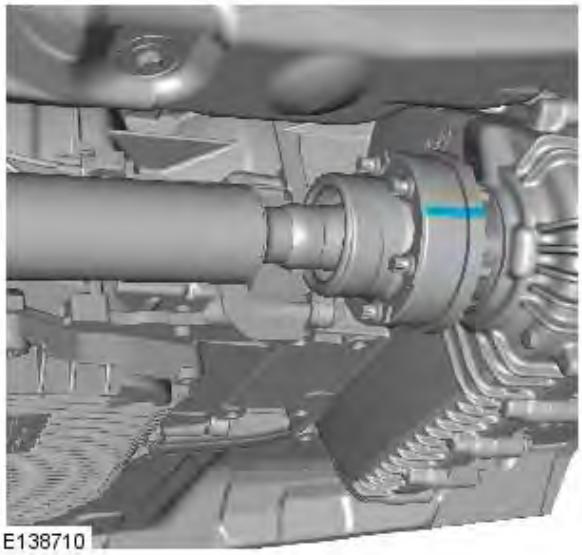

10. **10.** CAUTION: Discard the bolts.

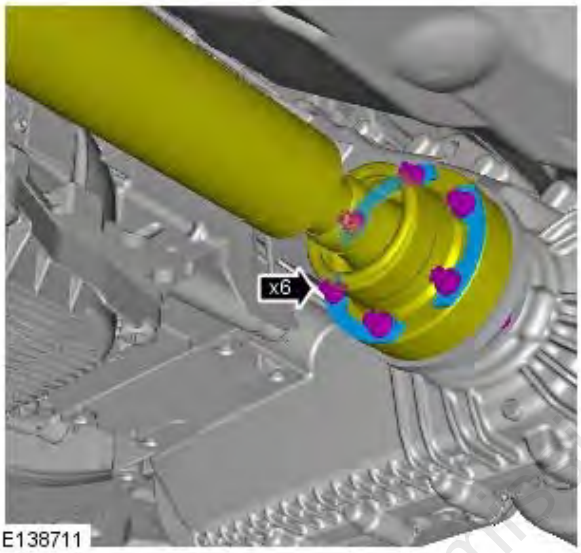

11.

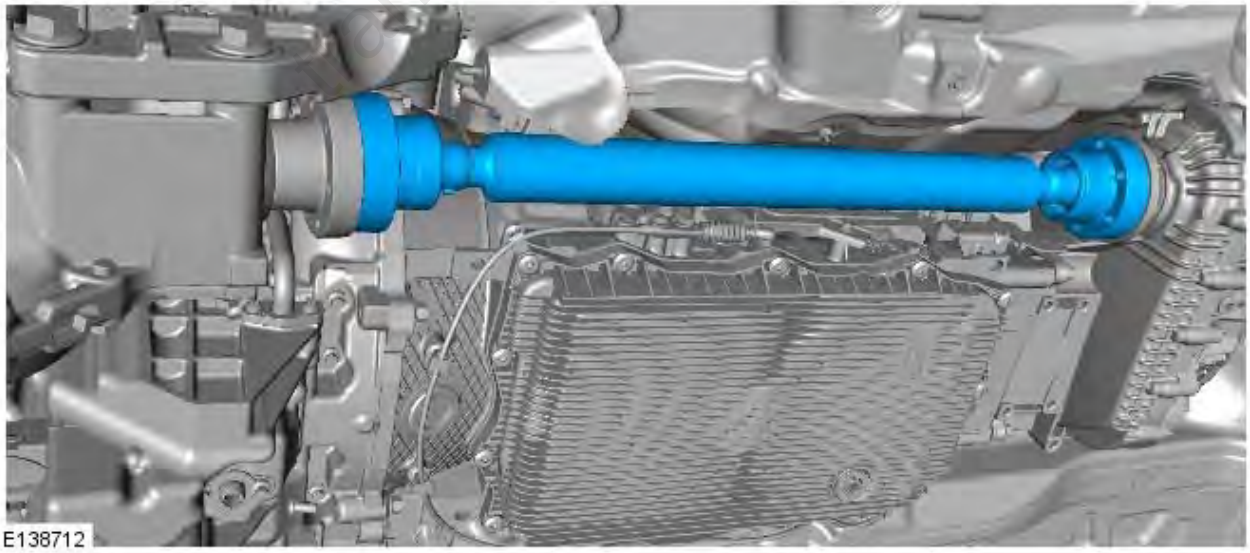

transmissionmanuals.com

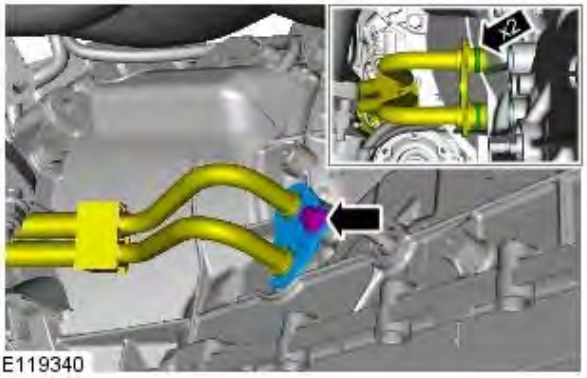

12. **12.** WARNING: Be prepared to collect escaping fluids.

    • NOTE: Make sure that all openings are sealed. Use new blanking caps.

    Remove and discard the O-ring seals.

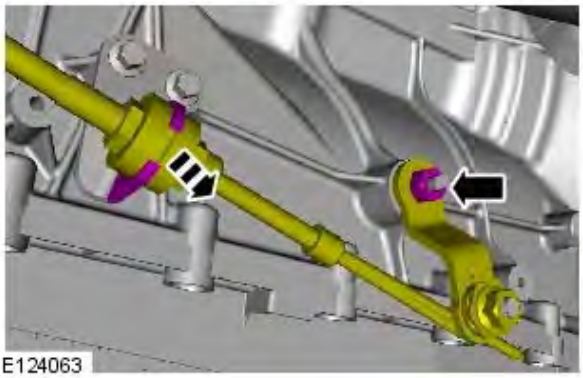

13.

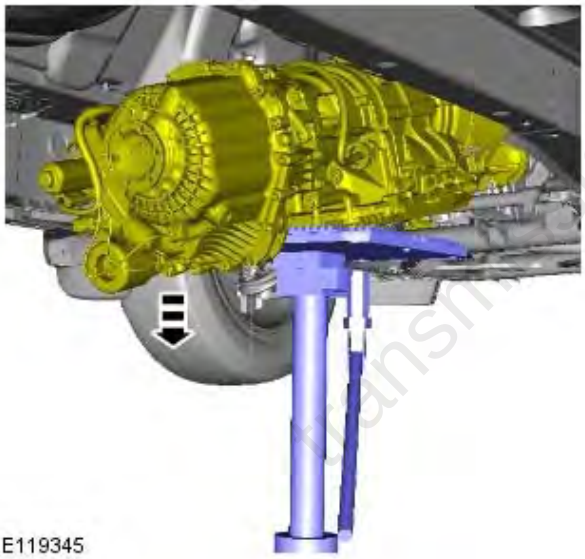

14. **14.** WARNING: Make sure that the transmission is secured with suitable retaining straps.

    Lower the rear of the transmission for access.

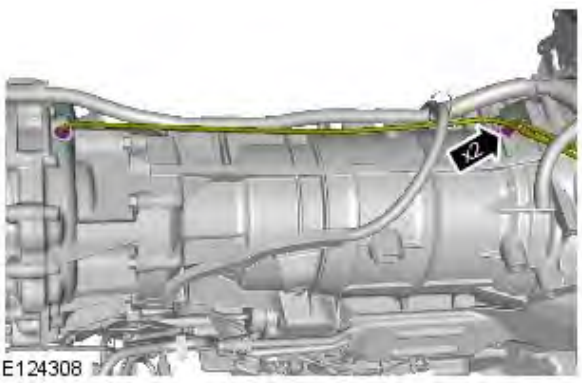

15.

transmissionmanuals.com

16.

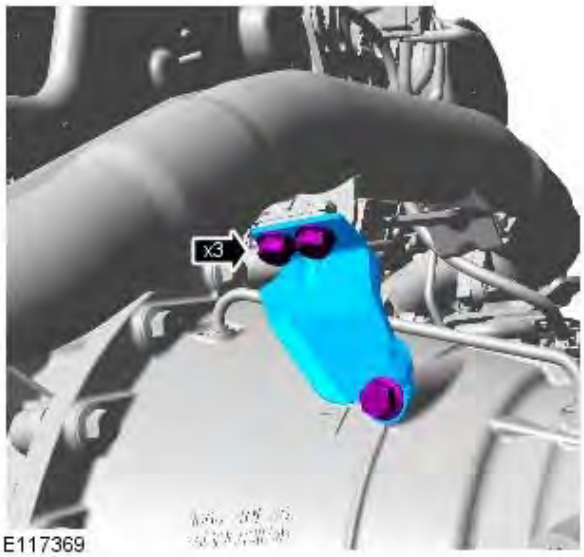

E117369

17.

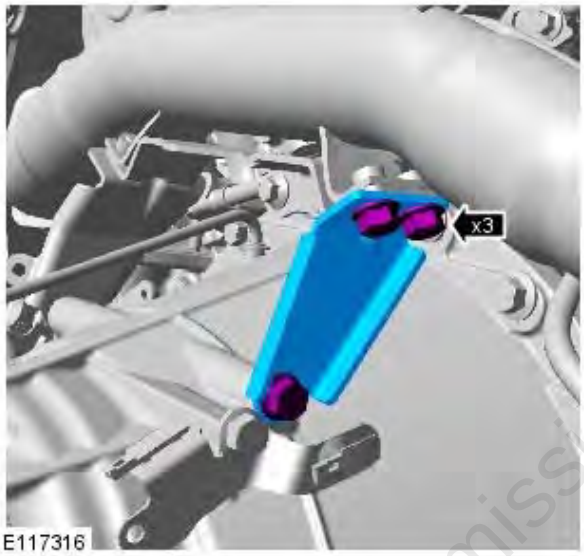

E117316

18.



E117299

transmissionmanuals.com

19.

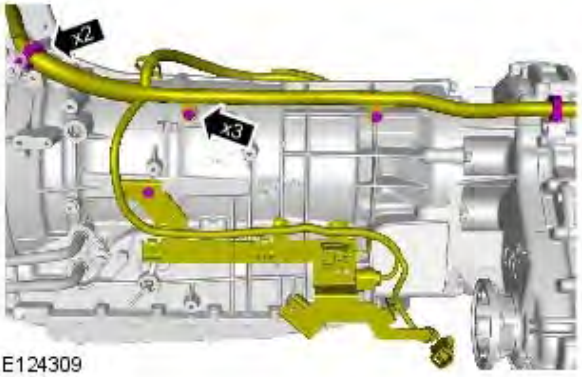

E124309

20.

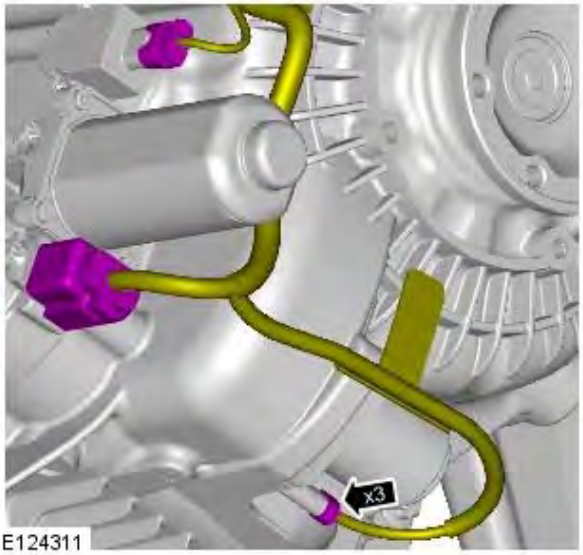

E124311

21.

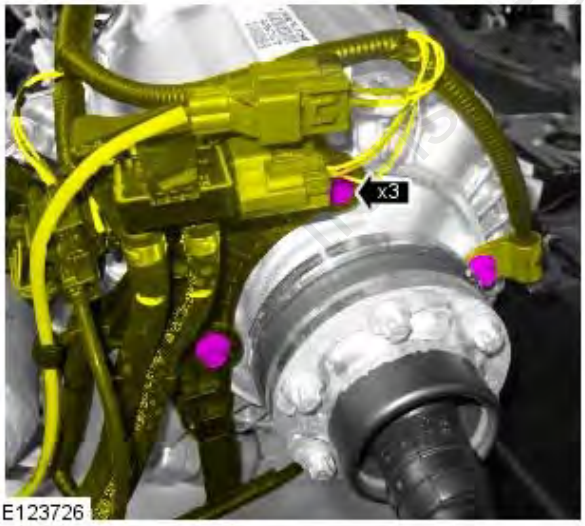

E123726

transmissionmanuals.com

22.



E123724

23.

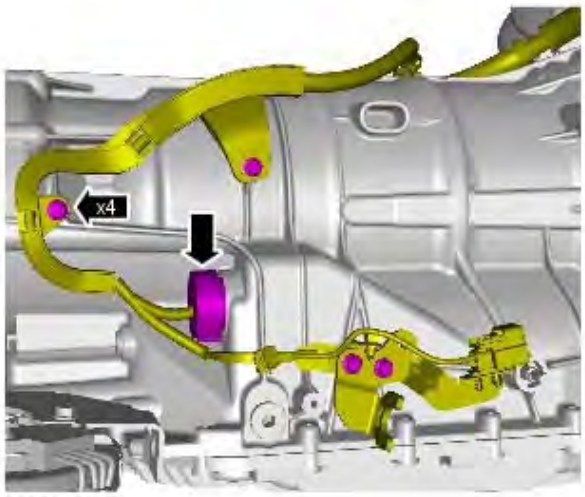

E124310

24.

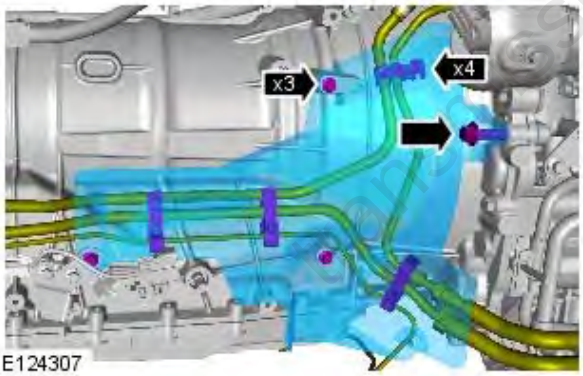

E124307

repairmanualsionmanuals.com

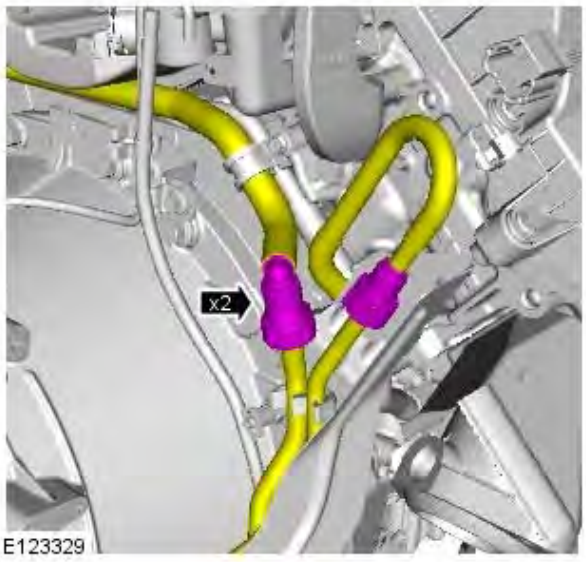

25. **25.** WARNING: Do not smoke or carry lighted tobacco or open flame of any type when working on or near any fuel related components. Highly flammable vapors are always present and may ignite. Failure to follow these instructions may result in personal injury.

CAUTION: Be prepared to collect escaping fluids.

• NOTE: Make sure that all openings are sealed. Use new blanking caps.

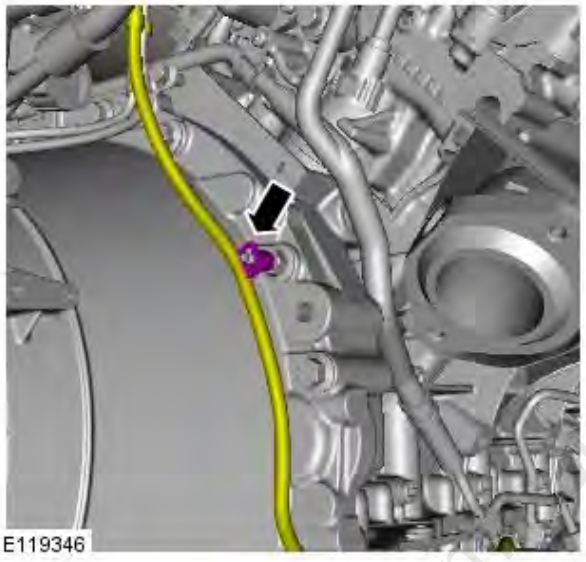

26.

27. Refer to: Starter Motor (303-06, Removal and Installation).

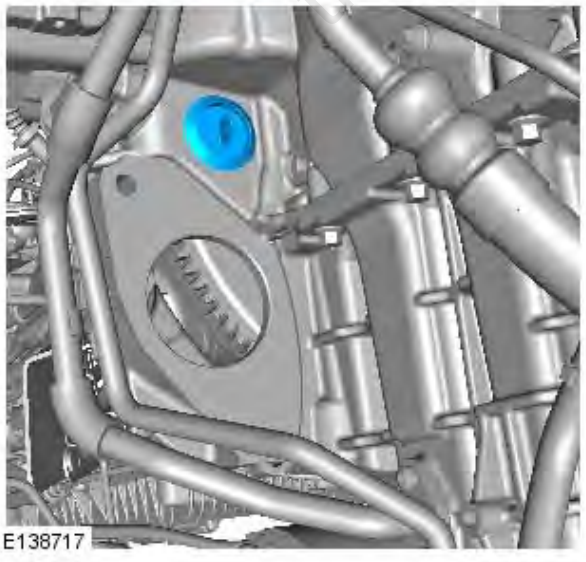

28.

transmissionmanuals.com

29.

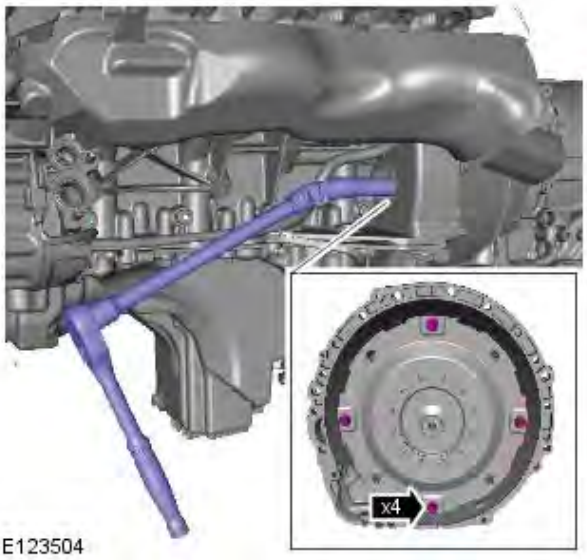

E123504

30.

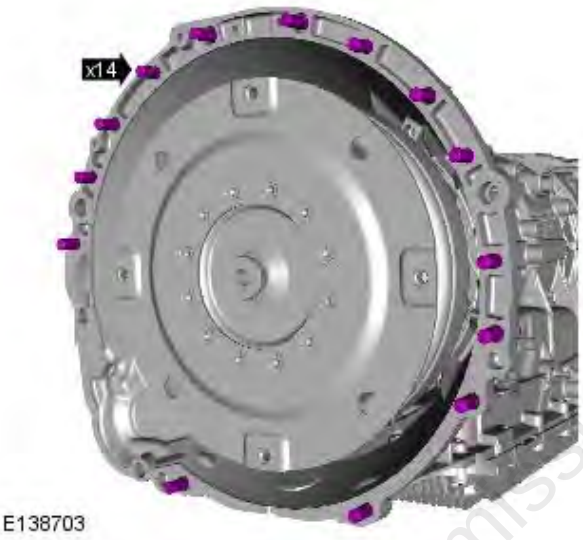

E138703

31. **31.** CAUTION: WARNING: Make sure that the transmission is secured with suitable retaining straps.


E119359

transmissionmanuals.com

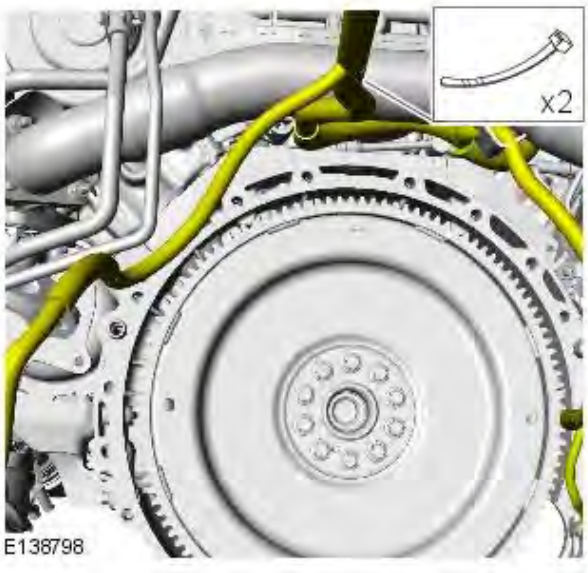

32. Carefully tie the harness aside.

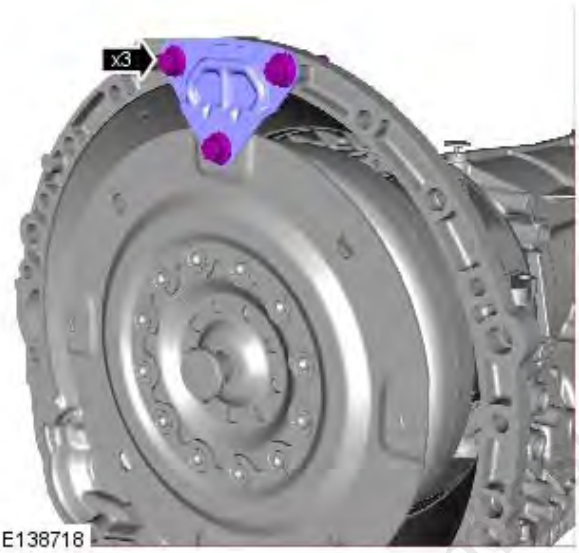

33. **33.** CAUTION: Make sure that the torque converter remains in the transmission.

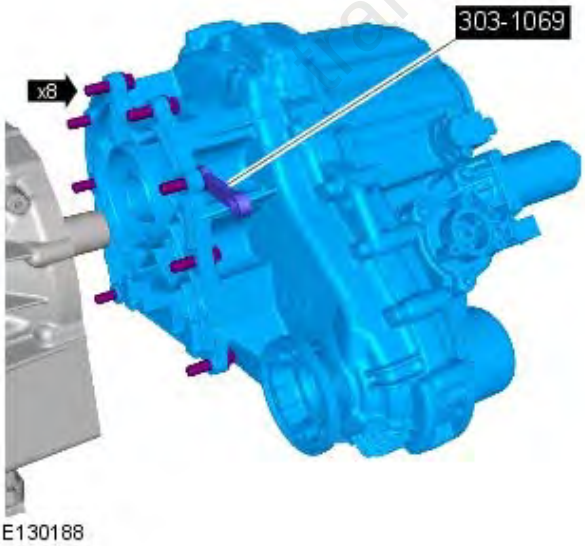

34. **34.** NOTE: Do not disassemble further if the component is removed for access only.

Special Tool(s): 303-1069

transmissionmanuals.com

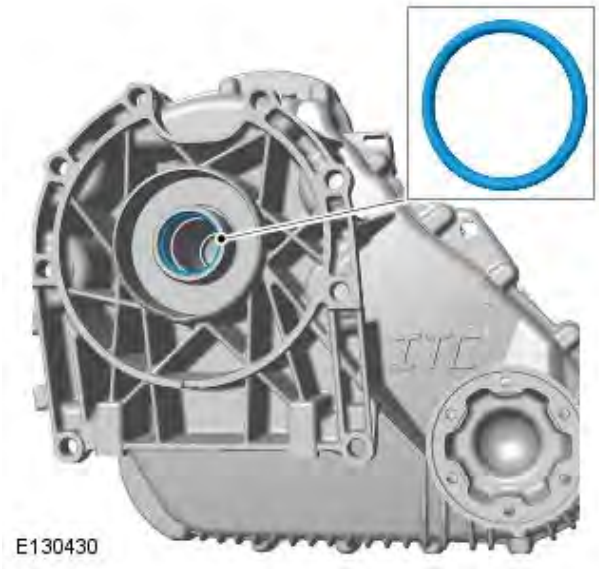

35. **35.** CAUTION: Inspect the seal, replace if damaged
    - NOTE: Remove and discard the O-ring seal.

transmissionmanuals.com

Published: 11-May-2011

Automatic Transmission / Transaxle - V8 5.0L Petrol / TDV6 3.0L Diesel - TransmissionV8 5.0L Petrol

Installation

- NOTE: Some variation in the illustrations may occur, but the essential information is always correct.
- NOTE: Some illustrations may show the transmission removed for clarity.
- NOTE: Some illustrations may show the engine removed for clarity.

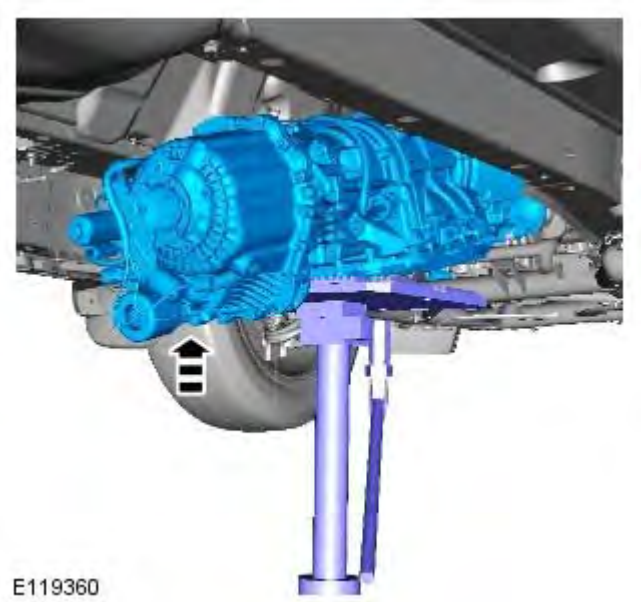

1. **1.** CAUTIONS:

   Apply grease of the correct specification to the torque converter spigot.

   Make sure the torque converter remains connected to the transmission.

   With assistance, install the transmission.



2. *Torque:* 40 Nm

transmissionmanuals.com

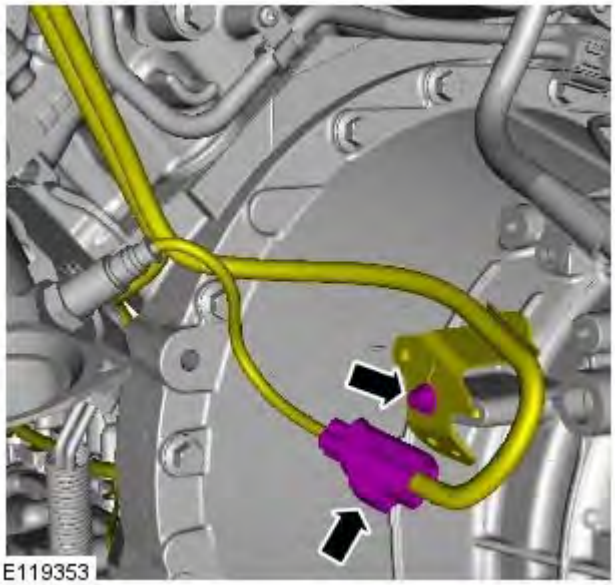

3. *Torque:* 10 Nm

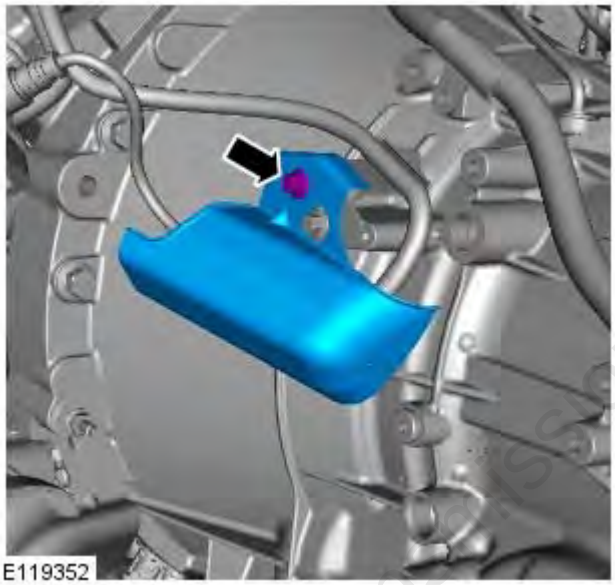

4. *Torque:* 10 Nm

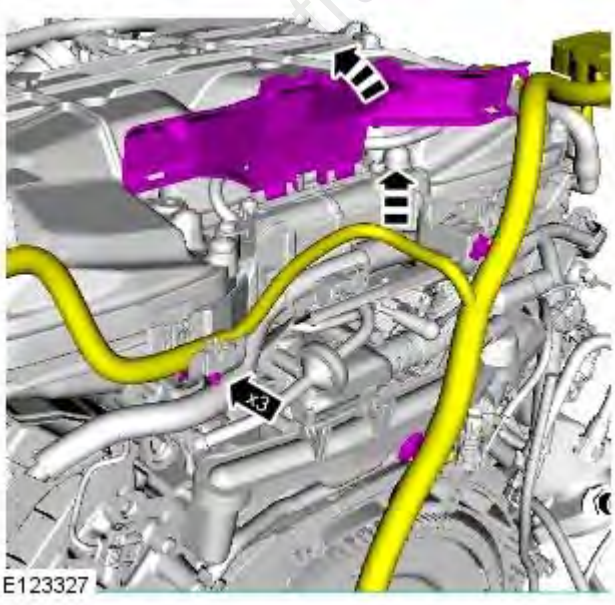

5.

transmissionmanuals.com

6.

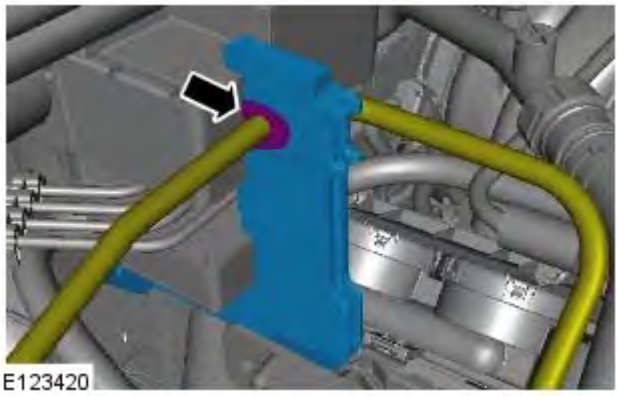

7.

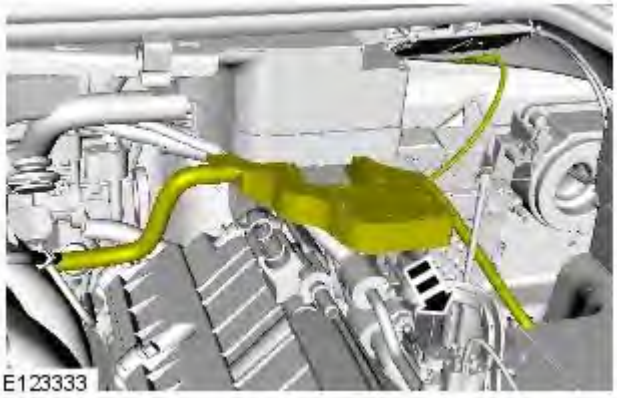

8.

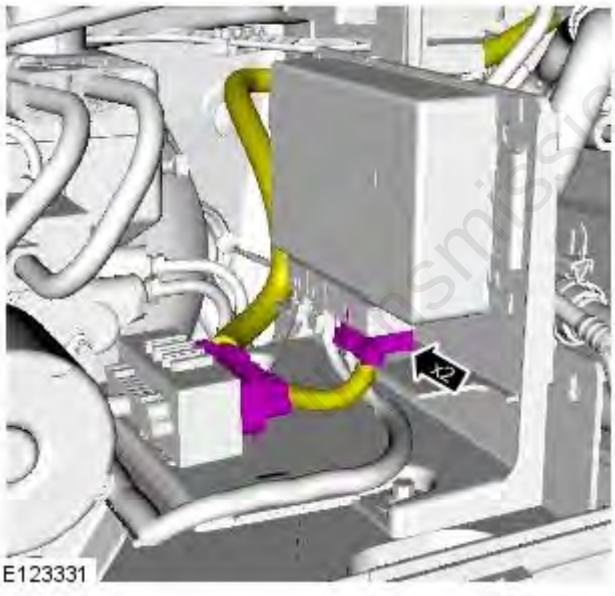

transmissionmanuals.com

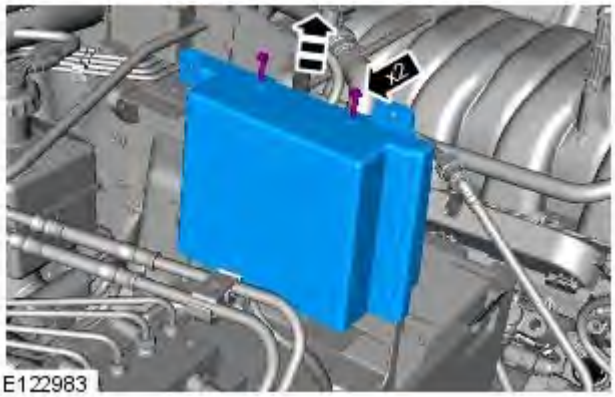

9. *Torque:* 3 Nm

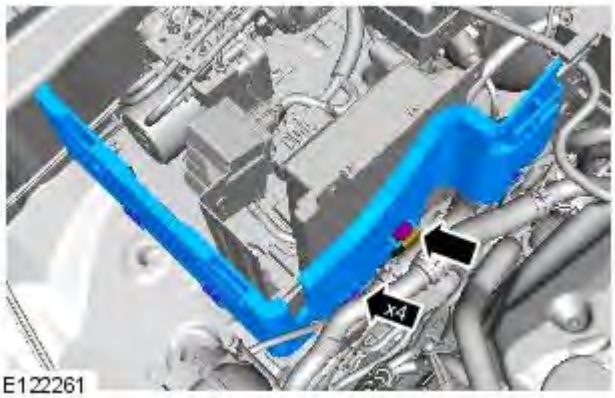

10. *Torque:* 9 Nm

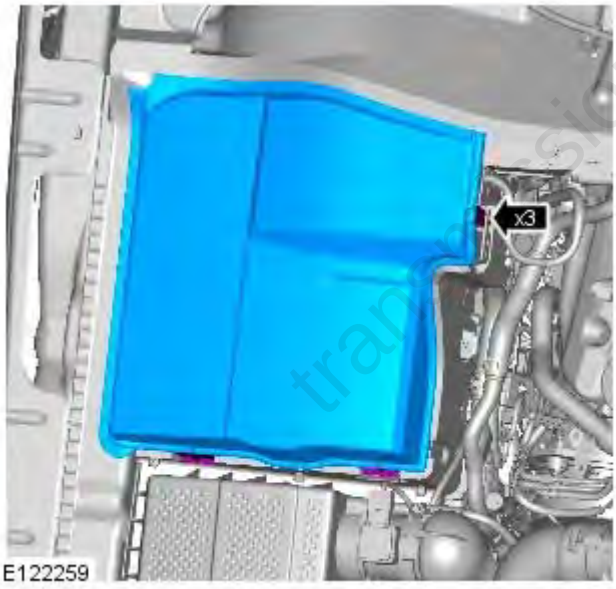

11. **11.** NOTE: RHD illustration shown, LHD is similar.

transmissionmanuals.com

12.

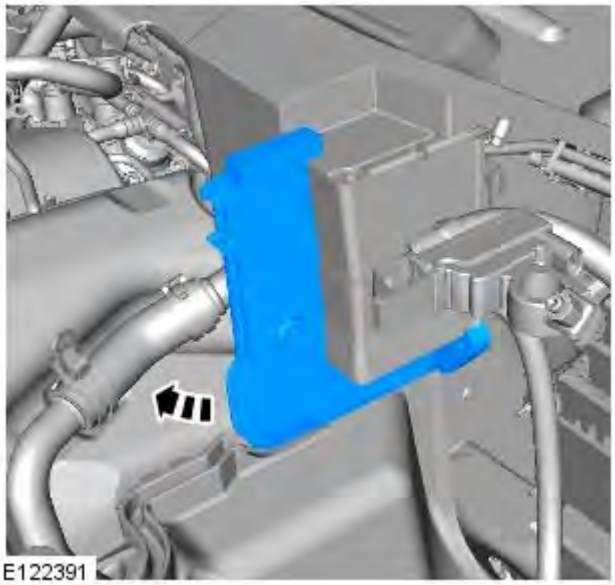
E122391

13.

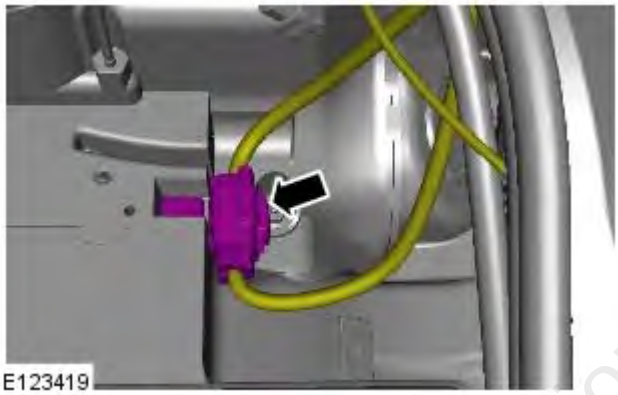
E123419

14. *Torque:* 9 Nm

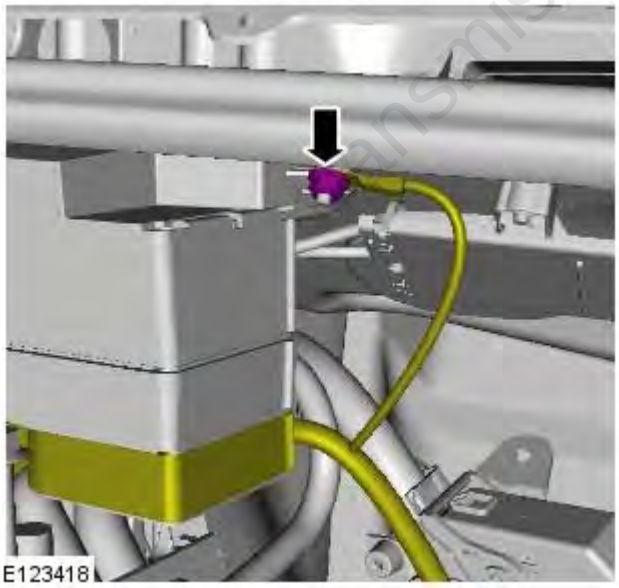
E123418

transmissionmanuals.com

15. **15.** NOTE: RHD illustration shown, LHD is similar.

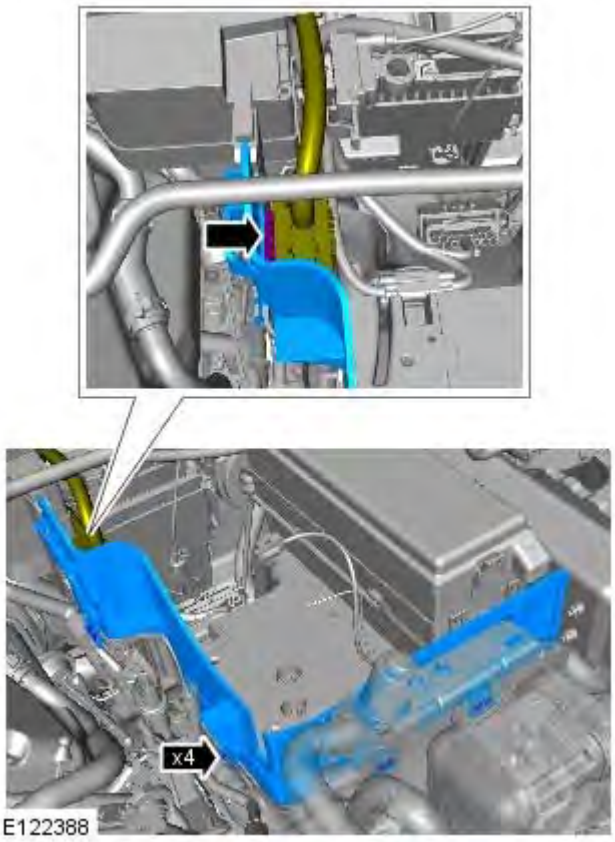

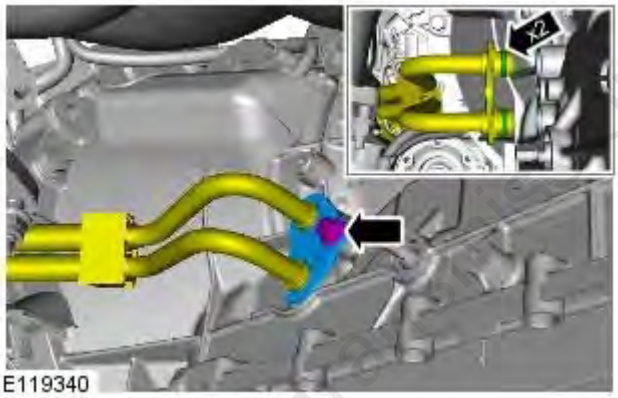

16. **16.** WARNING: Be prepared to collect escaping fluids.

- Install new O-ring seals.
- *Torque:* 12 Nm

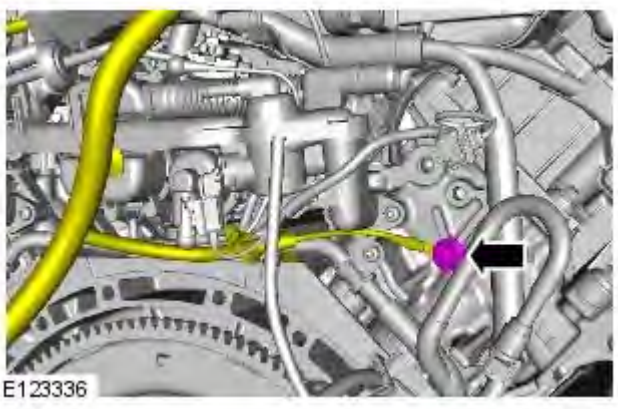

17.

18.

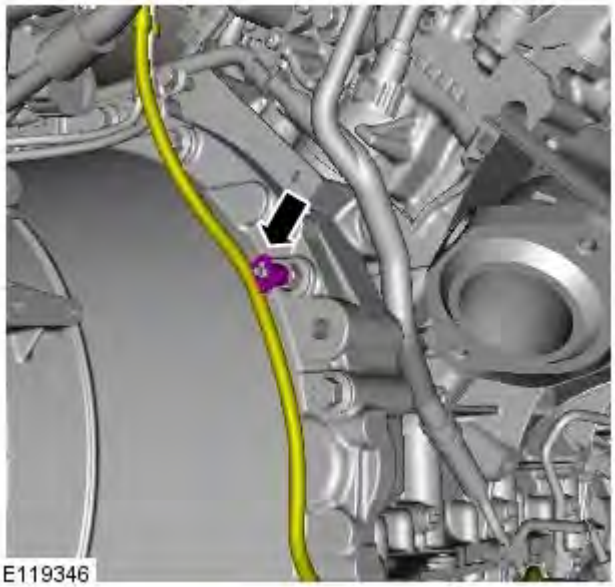
E119346

19.

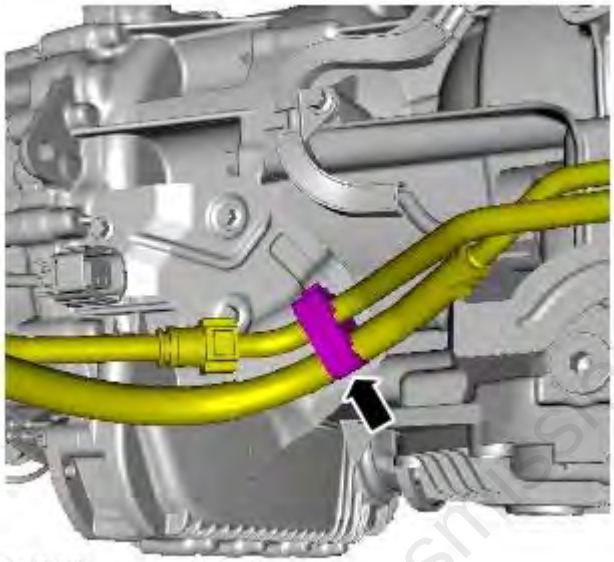
E123332

20. *Torque:* 10 Nm

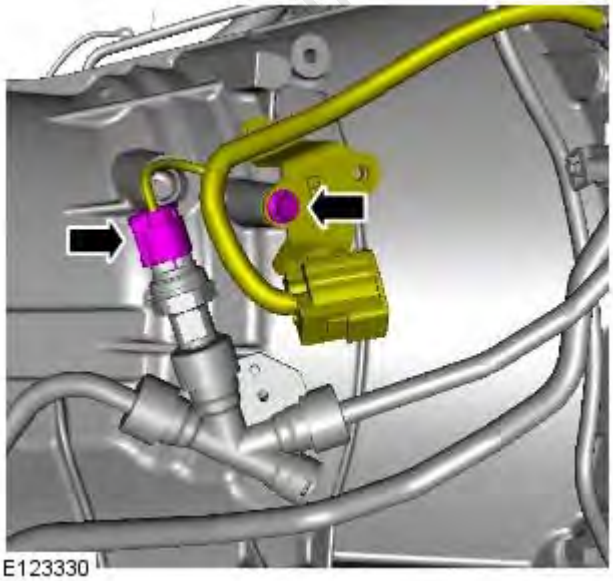
E123330

transmissionmanuals.com

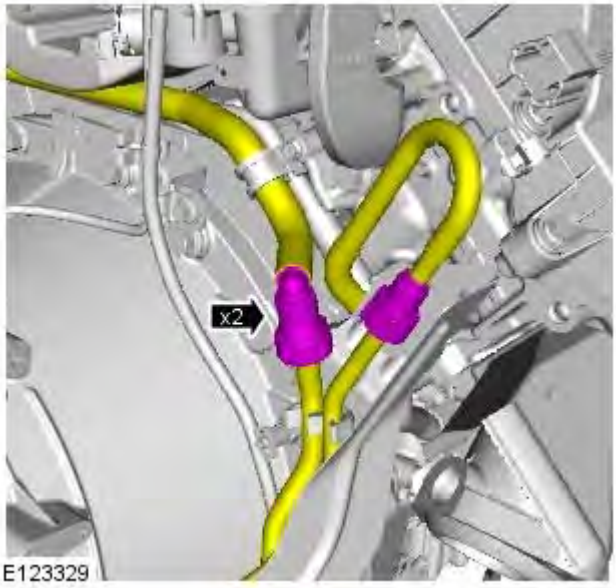

21. **21.** WARNING: Do not smoke or carry lighted tobacco or open flame of any type when working on or near any fuel related components. Highly flammable vapors are always present and may ignite. Failure to follow these instructions may result in personal injury.

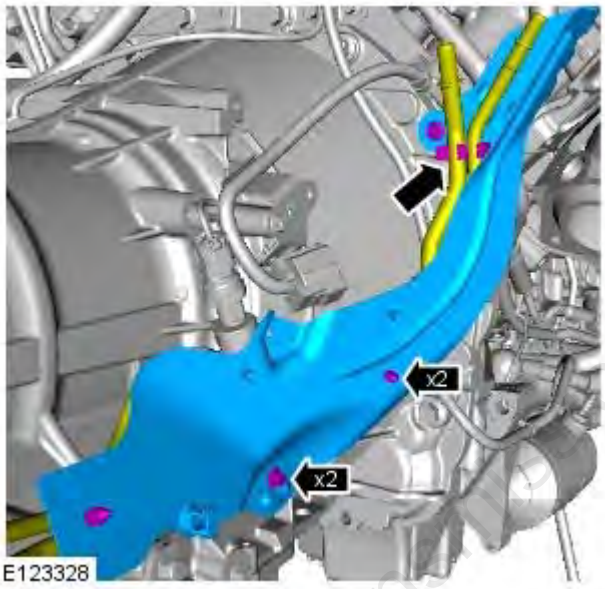

22. *Torque:* 10 Nm



23. *Torque:* 10 Nm

transmissionmanuals.com

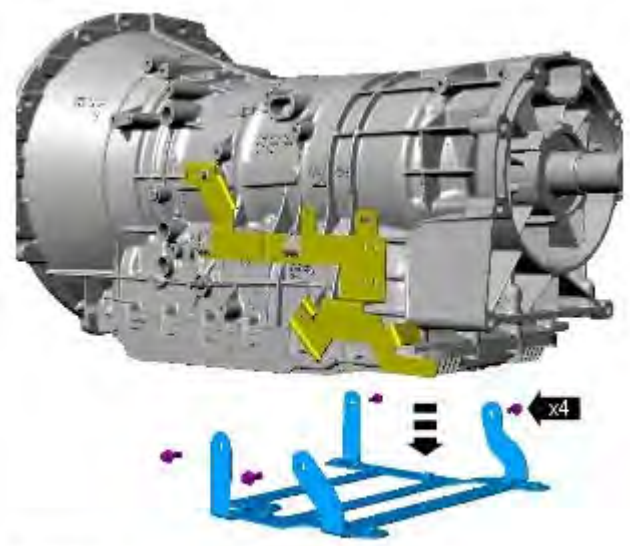

E123334

24. *Torque:* 9 Nm

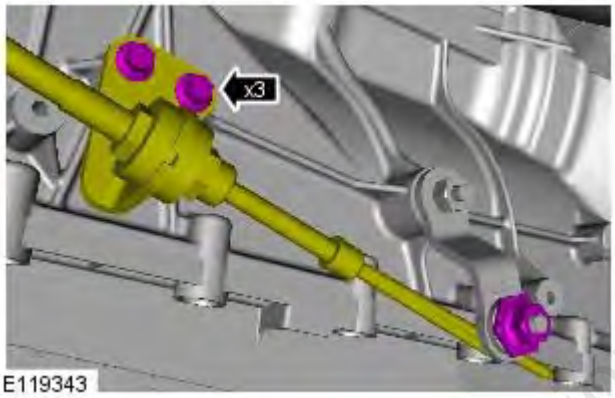

E119343

25. *Torque:*
M6 Bolt 10 Nm
M6 Nut 12 Nm

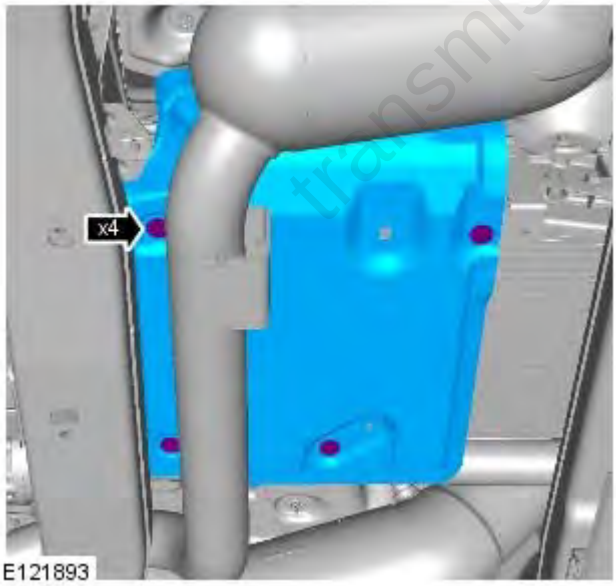

E121893

26. *Torque:* 8 Nm

transmissionmanuals.com



27.

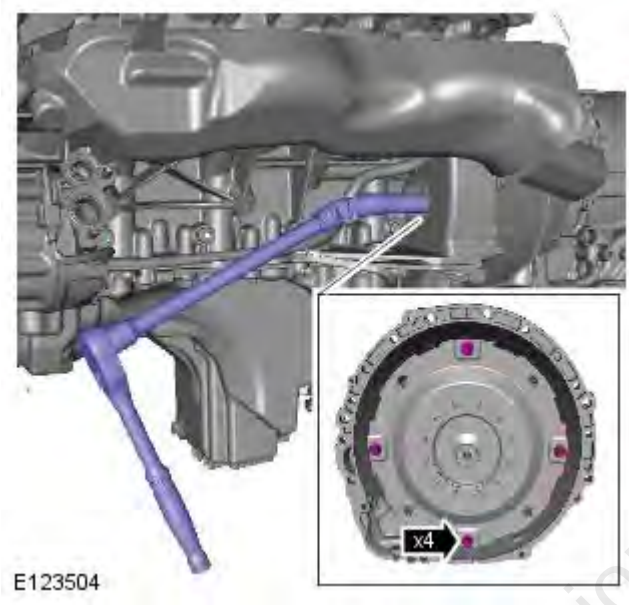

28. **28.** CAUTION: Only rotate the crankshaft clockwise.

    Make sure that the alignment mark is visable through the inspection hole on install of the first torque converter bolt.

    Torque: 63 Nm

29. Refer to: Front Driveshaft - V8 5.0L Petrol (205-01 Driveshaft, Removal and Installation).

30. Refer to: Exhaust System (309-00D Exhaust System - V8 5.0L Petrol, Removal and Installation).

31. Refer to: Rear Driveshaft (205-01 Driveshaft, Removal and Installation).

32. Refer to: Axle Assembly (205-03 Front Drive Axle/Differential, Removal and Installation).

33. **33.** WARNING: Make sure to support the vehicle with axle stands.

    Lower the vehicle.

34. Install the battery.

    Refer to: Battery (414-01 Battery, Mounting and Cables, Removal and Installation).

transmissionmanuals.com

Published: 09-Aug-2011

Automatic Transmission / Transaxle - V8 5.0L Petrol / TDV6 3.0L Diesel - TransmissionTDV6 3.0L Diesel

Installation

Special Tool(s)

	303-1069 Adaptor, Wrench

- NOTE: Some variation in the illustrations may occur, but the essential information is always correct.
- NOTE: Some illustrations may show the transmission removed for clarity.
- NOTE: Some illustrations may show the engine removed for clarity.

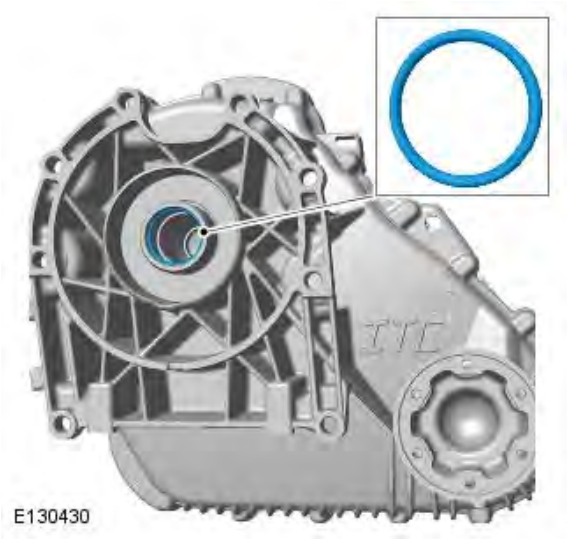

1. **1.** NOTE: This step is only required if previously removed.
   - NOTE: Install a new O-ring seal.

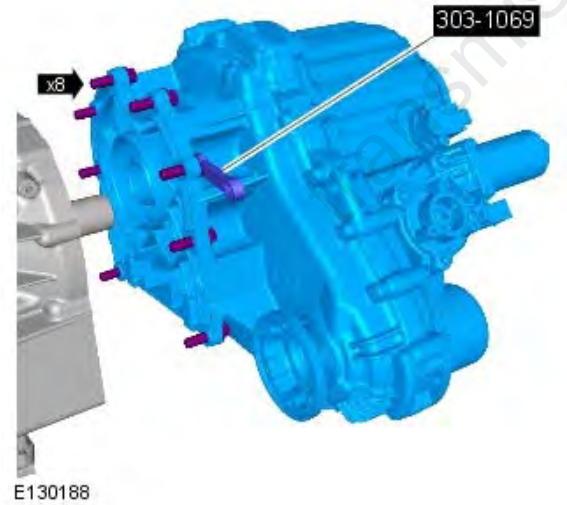

2. **2.** NOTE: This step is only required if previously removed.
   - Clean the component mating faces.
   - Lubricate input shaft splines with 'Weicon TL7391' grease.
   - *Special Tool(s):* 303-1069
   - *Torque:* 45 Nm

transmissionmanuals.com

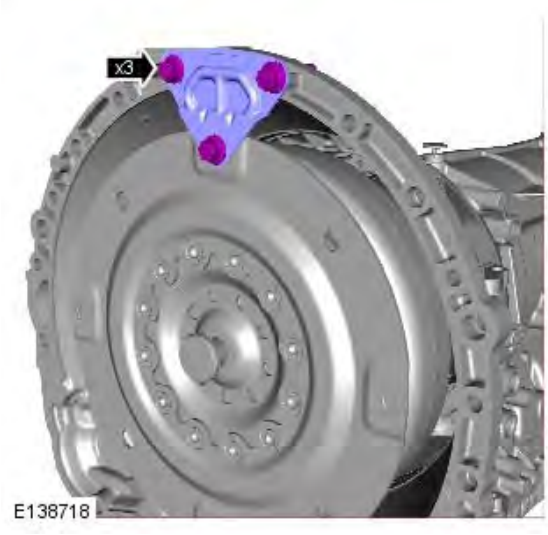

3. **3.** CAUTION: Make sure that the torque converter remains in the transmission.

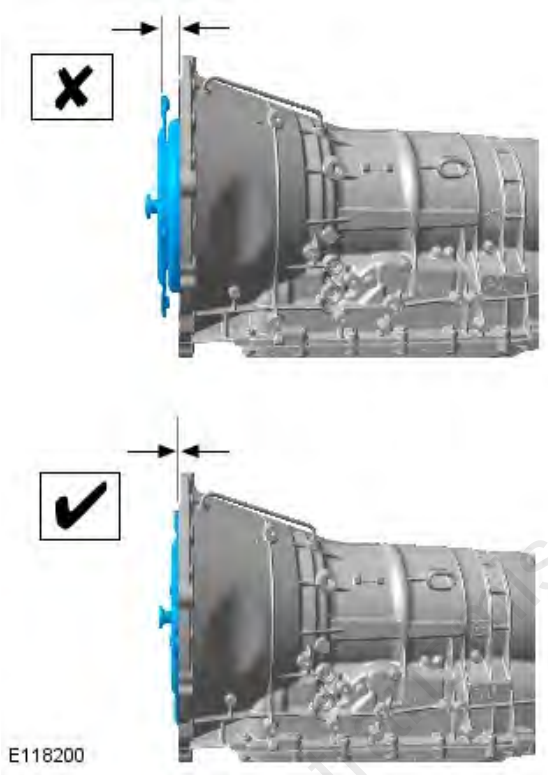

4. **4.** CAUTION: Make sure the torque converter is fully located into the oil pump drive.

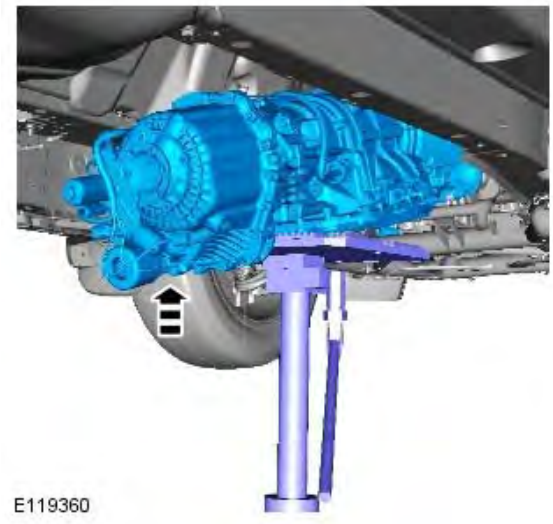

5. **5.** CAUTIONS:

   Apply grease of the correct specification to the torque converter spigot.

   Make sure that the torque converter remains in the transmission.

transmissionmanuals.com

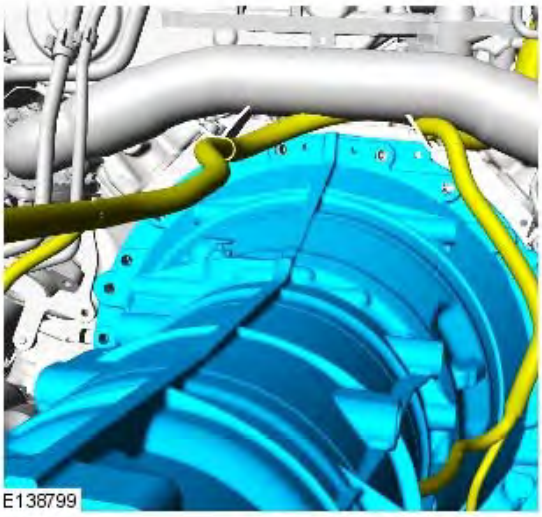

6. **6.** CAUTION: Care must be taken to avoid damaging the transmission wiring harness.

   Cut the cable ties securing the harness.

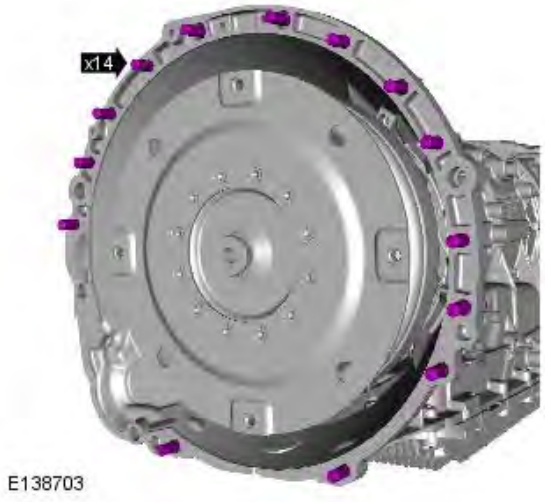

7. *Torque:* 40 Nm

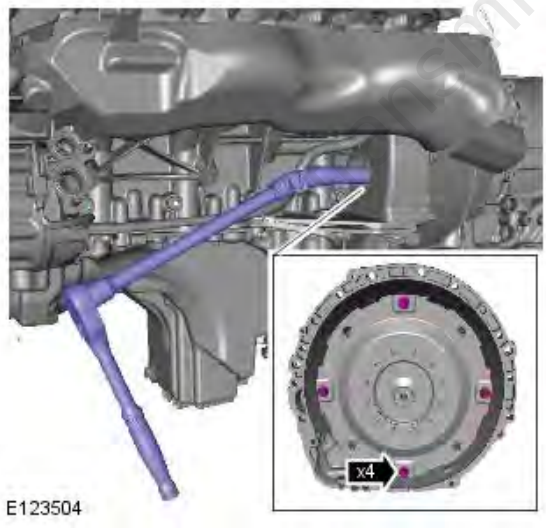

8. *Torque:* 63 Nm

transmissionmanuals.com

9.

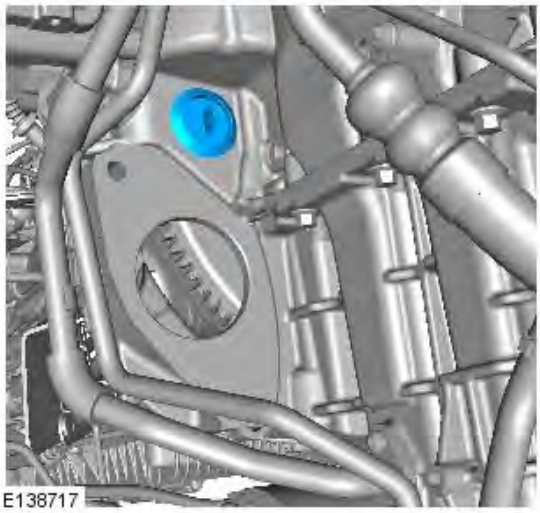
E138717

10. Refer to: Starter Motor (303-06, Removal and Installation).

11.

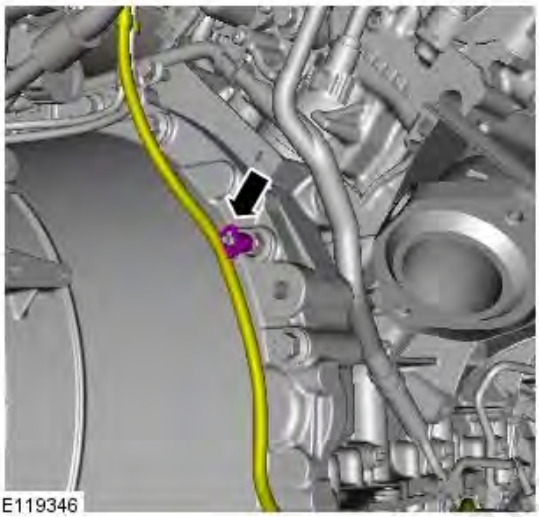
E119346

12. *Torque:* 23 Nm

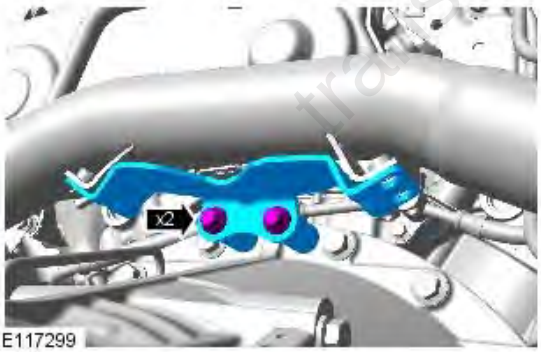

E117299

transmissionmanuals.com

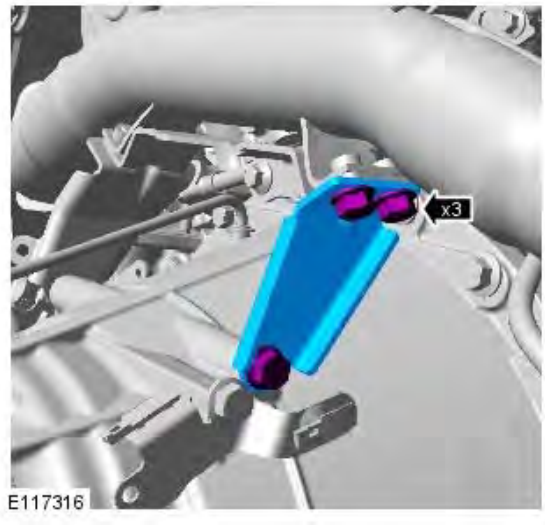

13. **13.** CAUTION: Only tighten the bolts finger-tight at this stage.

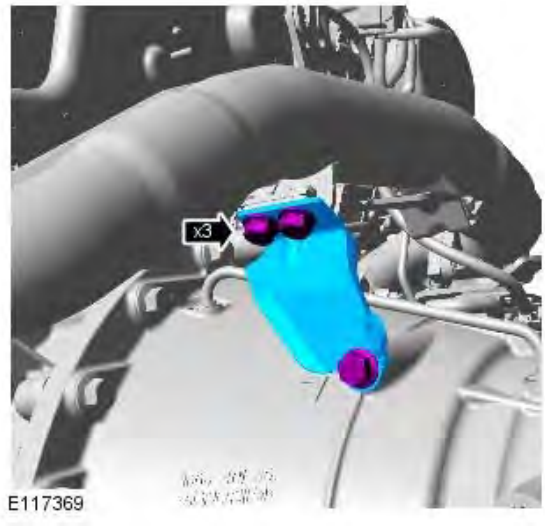

14. **14.** CAUTION: Only tighten the bolts finger-tight at this stage.

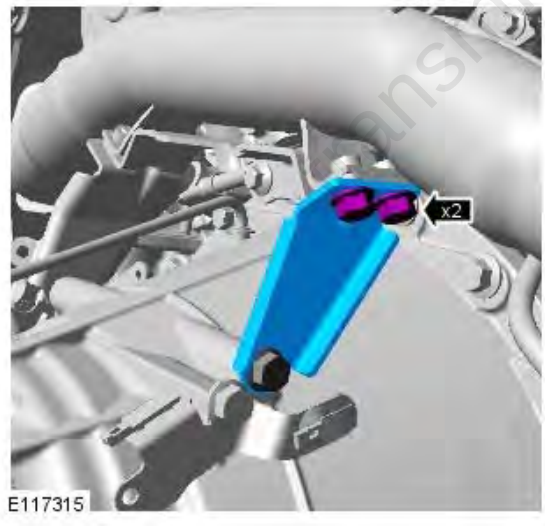

15. *Torque:* 23 Nm

transmissionmanuals.com

16. *Torque:* 23 Nm

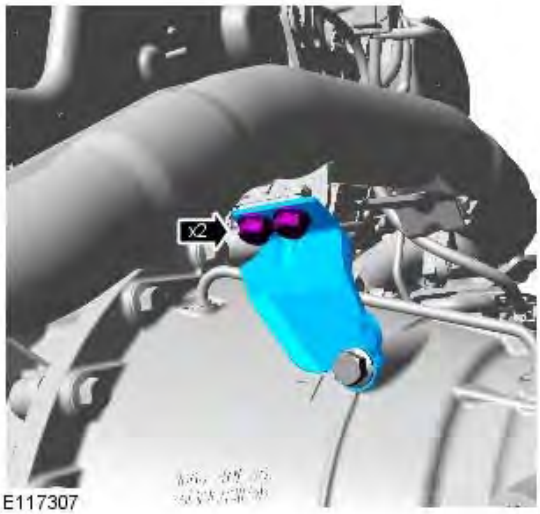

17. *Torque:* 23 Nm

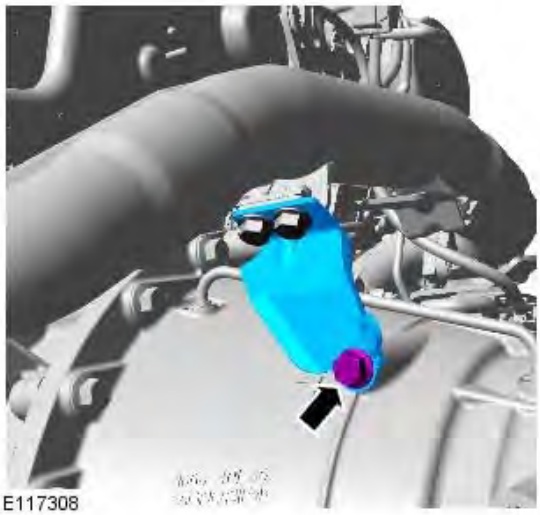

18. *Torque:* 23 Nm

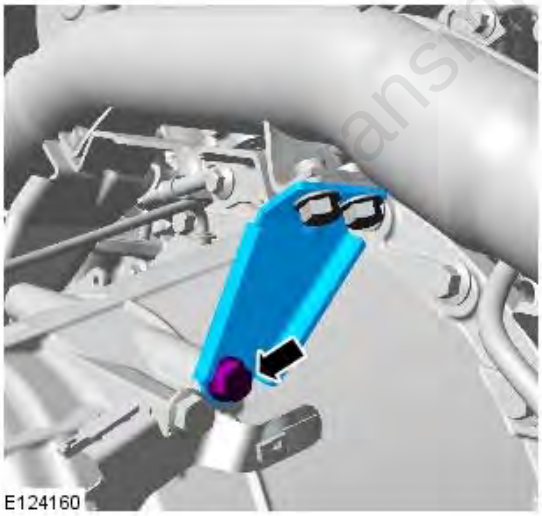

transmissionmanuals.com

19.

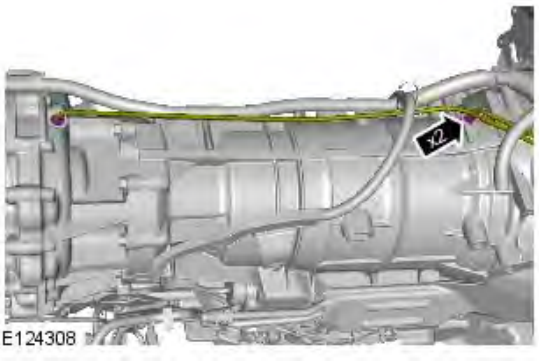

E124308

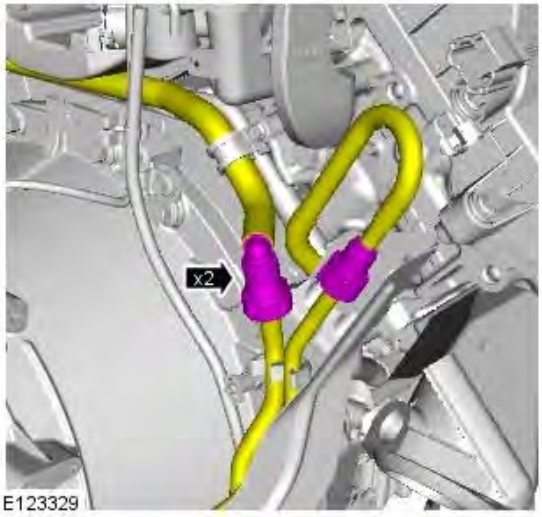

E123329

20. **20.** WARNING: Do not smoke or carry lighted tobacco or open flame of any type when working on or near any fuel related components. Highly flammable vapors are always present and may ignite. Failure to follow these instructions may result in personal injury.

CAUTION: Be prepared to collect escaping fluids.

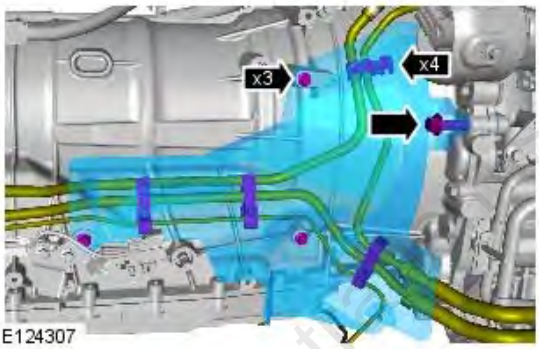

E124307

21. *Torque:*
M6 9 Nm
M10 40 Nm

22. *Torque:* 9 Nm

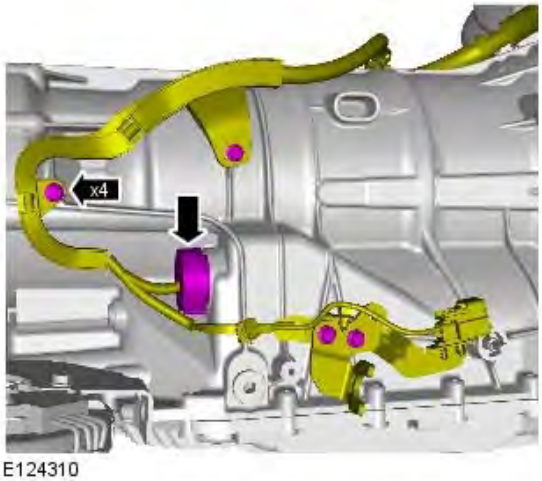

E124310

transmissionmanuals.com



E123724

23. *Torque:* 9 Nm

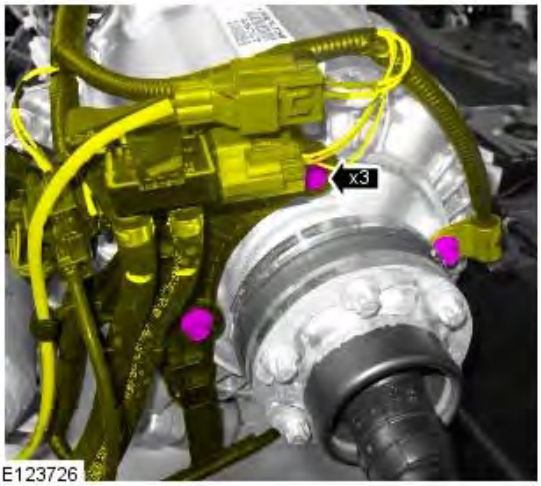

E123726

24. *Torque:* 9 Nm

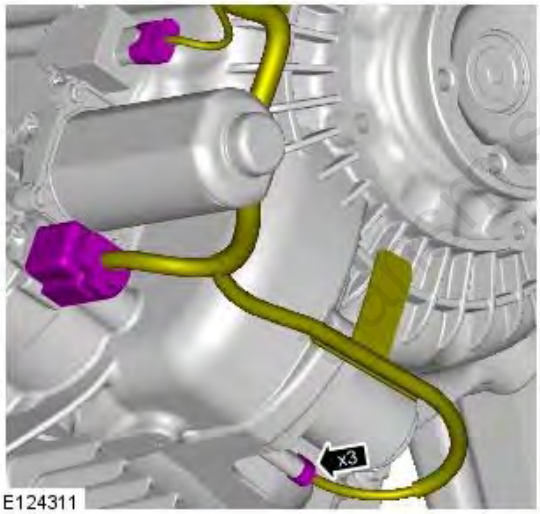

E124311

25.

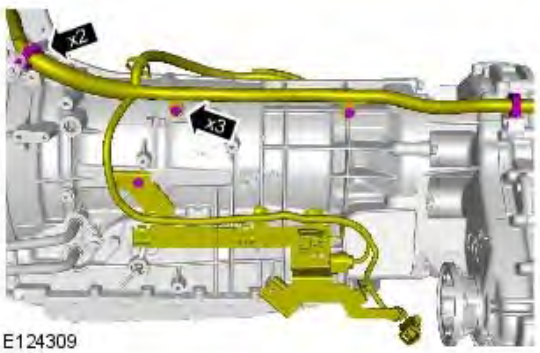

E124309

26. *Torque:* 9 Nm

transmissionmanuals.com

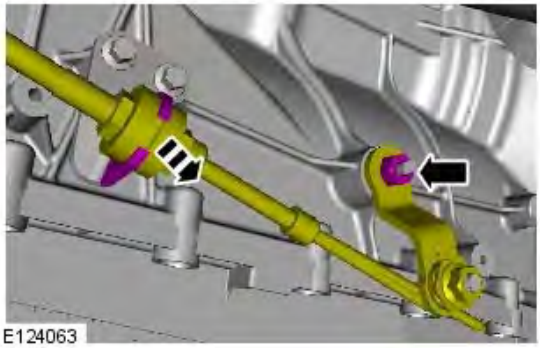
E124063

27. *Torque:* 12 Nm

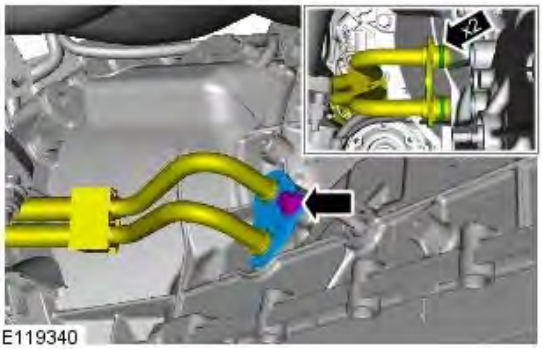

E119340

28. **28.** NOTE: Install new O-ring seals.

Torque: 12 Nm

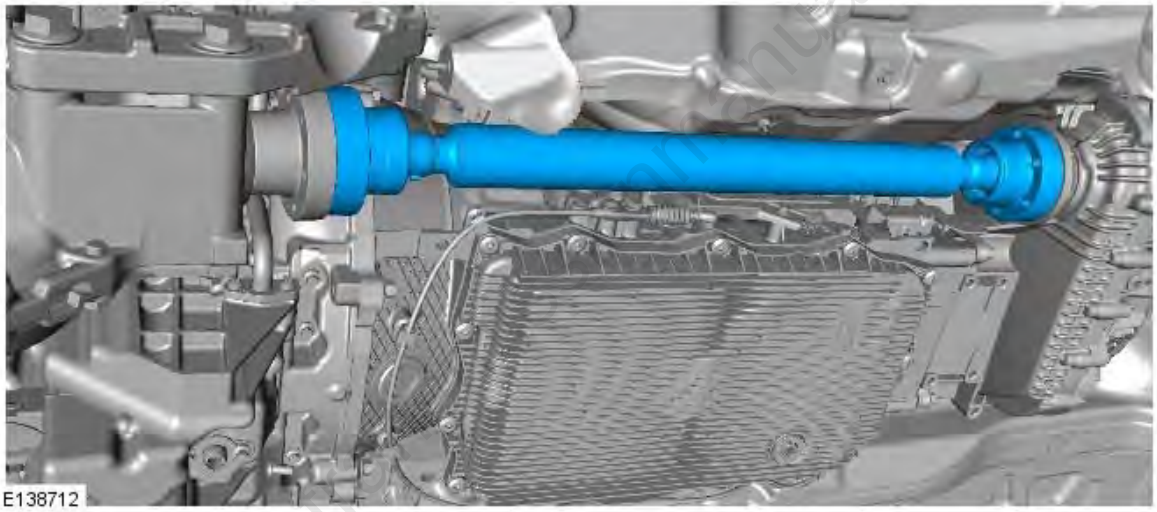
E138712

29. Using a suitable tie strap, secure the driveshaft.

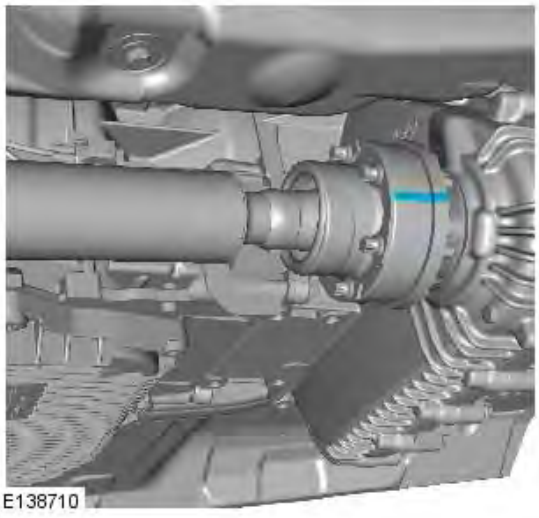
E138710

30. **30.** NOTE: Make sure that the component aligns with the installation mark noted in the removal step.

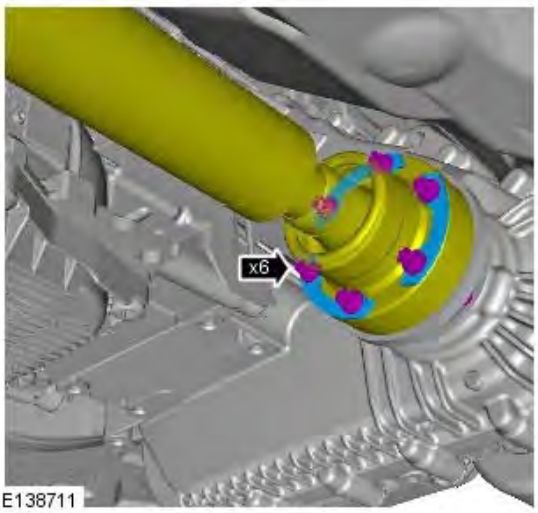

E138711

31. **31.** CAUTION: Make sure that new bolts are installed.

    Torque:
    Stage 1:45 Nm
    Stage 2:90°

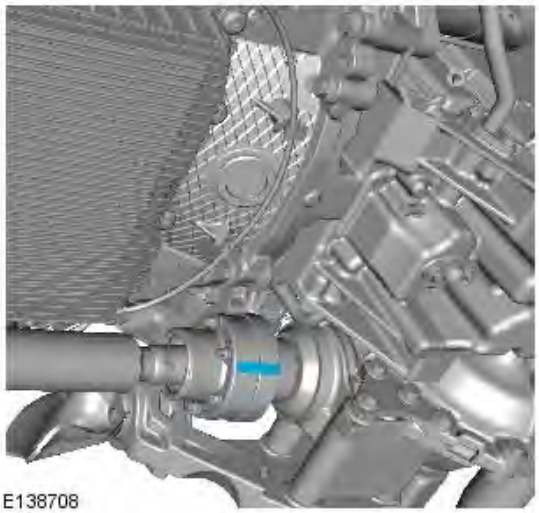
E138708

32. **32.** NOTE: Make sure that the component aligns with the installation mark noted in the removal step.

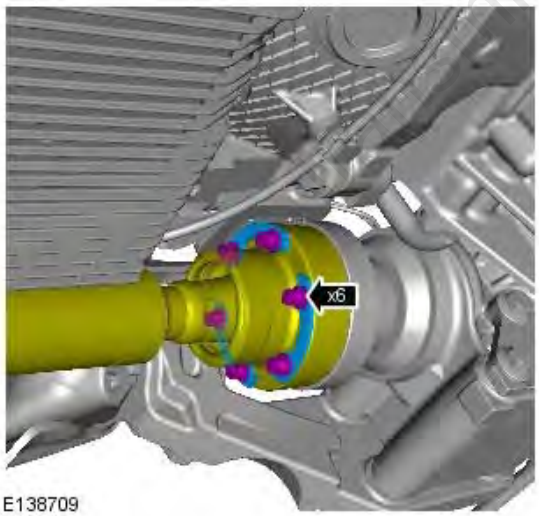

E138709

33. **33.** CAUTION: Make sure that new bolts are installed.

    Torque:
    Stage 1:45 Nm
    Stage 2:90°

34. Refer to: Catalytic Converter (309-00B Exhaust System - TDV6 3.0L Diesel, Removal and Installation).

35.
- Remove the securing straps.
- Remove the jack supporting the transmission.

36. Refer to: Rear Driveshaft (205-01 Driveshaft, Removal and Installation).

missionmanuals.com

37.

- Connect the battery ground cable.
- Refer to: Specifications (414-00, Specifications).

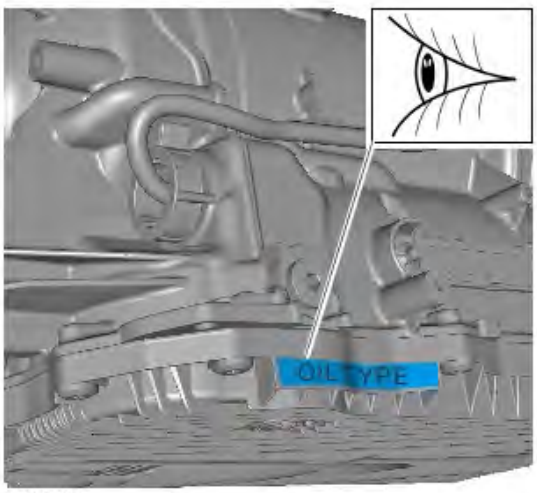

E138154

38. **38.** CAUTIONS:

Make sure the correct specification of oil is used.

Make sure the transmission fluid fill plug is tightened to the correct specification. Failure to follow this instruction may result in damage to the vehicle.

• NOTE: Install a new fluid level filler plug.

- Carry out a transmission fluid level check.
- To make sure the transmission fill plug is torqued to the correct specification. Using the special tool and torque wrench the following calculation steps must be followed.
- Step 1. Multiply 35 Nm by the effective length of the torque wrench (1).
- Step 2. Add the effective length of the special tool (2) to the effective length of the torque wrench (1).
- Step 3. Divide the total of step 1 by the total of step 2.
- Step 4. Set the torque wrench to the figure arrived at in step 3.
- Tighten the transmission fluid fill plug to the torque given by the calculation.

transmissionmanuals.com